Hand in hand for tomorrow

Product data sheet

Automatic jaw quick-change system BSWS-R-PGZN-plus

Fast. Flexible. Cost-effective.

Automatic jaw quick-change system BSWS-R

The automatic jaw quick-change system BSWS-R allows top jaws to be exchanged on the gripper automatically and rapidly. This increases the flexibility of the gripper with simultaneous unattended machine availability. The BSWS-R enables cost-efficient automatic change of workpiece-specific gripper fingers compared to changing the entire gripper.

Field of application

For handling different workpieces or workpiece geometries in clean to slightly dirty environments through use of different gripper fingers. For all processes in which manual changing procedures are not possible.

Advantages – Your benefits

Automatic exchange of gripper jaws simple, without energy and without manual intervention, purely through the movement of the robot

Also suitable for operation on cobots Deposit station prevents overloading of the robot through elastic mounting

PGN-plus-P fingerprint enables universal use and retrofitting in a wide range of gripper series

Simple finger design there is no longer any need for the customized gripper fingers to be screwed through, a thread only has to be made in the finger

Process reliability by monitoring the presence of the gripper fingers in the deposit station by means of an inductive proximity switch

No confusion of the gripper jaws possible via finger coding using an RFID data carrier

Sizes
Quantity: 9

Weight
0.01 .. 1.98 kg

Functional description

The BSWS-R consists of a base, which is firmly screwed to the workpiece-specific gripper finger to be changed, and two adapter pins, which are fastened to the base jaw of the gripper. The form-fit locking mechanism ensures fast exchange of the gripper fingers. Gripper fingers are changed by retraction into the storage station, whereby the locking mechanism is activated. As a result, the gripper finger remains in the deposit station when it is extended upwards. Two adapter pins (= 1 set BSWS-AR), a base (BSWS-BR) and a storage station (BSWS-SR) are required for each gripper jaw.

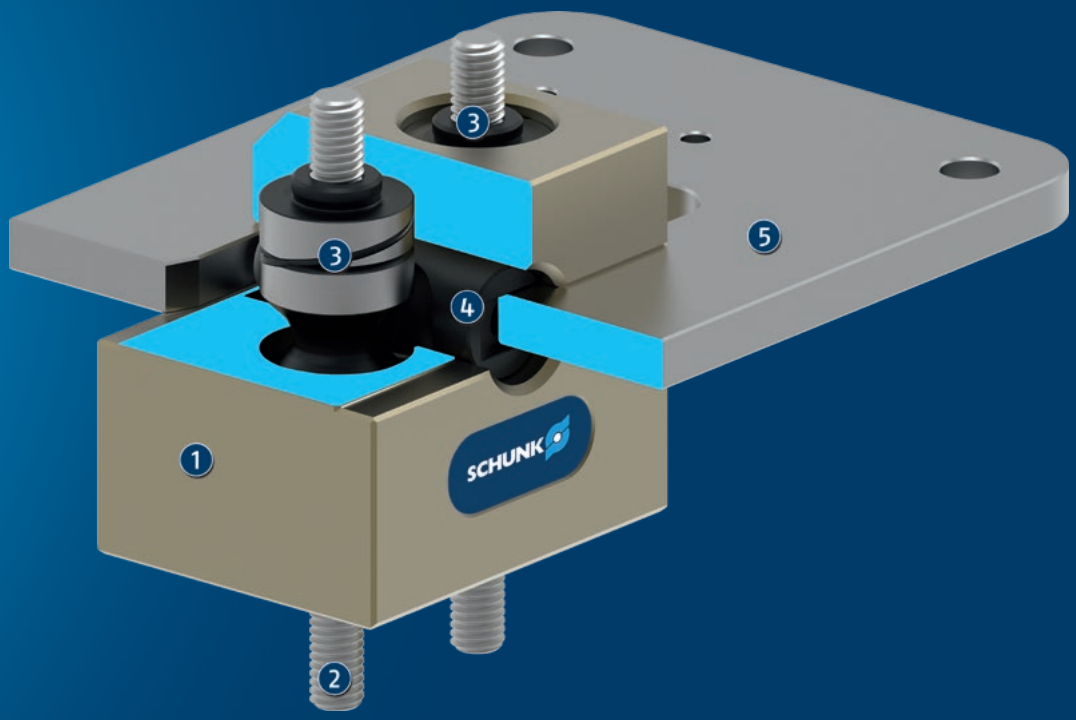

① **Basic jaw quick-change system BSWS-BR**

② **Fastening of the workpiece-specific gripper finger**

③ **Adapter pin BSWS-AR for fastening to the gripper base jaw**

④ **Spring preloaded locking pin**

⑤ **Deposit station BSWS-SR for depositing the workpiece-specific gripper finger incl. basic jaw quick-change system BSWS-BR**

Detailed functional description

Automatic jaw quick-change system BSWS-BR/BSWS-AR

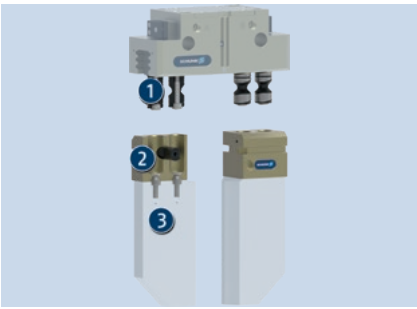

With the combination of basic BSWS-BR (firmly screwed onto the workpiece-specific gripper finger) and adapter pin BSWS-AR (firmly screwed onto the base jaws of the gripper), an automatic change of the gripper jaws is possible.

1. BSWS-AR jaw quick-change adapter
2. Basic jaw quick-change system BSWS-BR
3. Workpiece-specific gripper fingers

BSWS-BR in locked status without adapter pin BSWS-AR

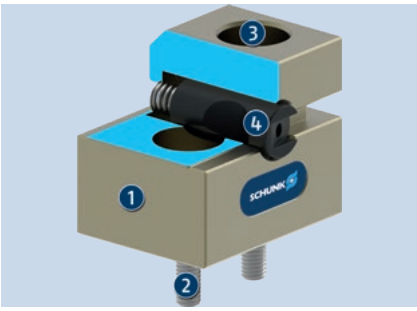

The locking pin is spring-preloaded and therefore in a locked status as standard. The gripper finger must be retracted into the deposit station BSWS-SR in order to change it.

1. Basic jaw quick-change system BSWS-BR
2. Fitting for fastening of the workpiece-specific gripper finger
3. Mounting bore for jaw quick-change adapter BSWS-AR
4. Spring preloaded locking pin

BSWS-BR in unlocked status in the deposit station BSWS-SR without adapter pin BSWS-AR

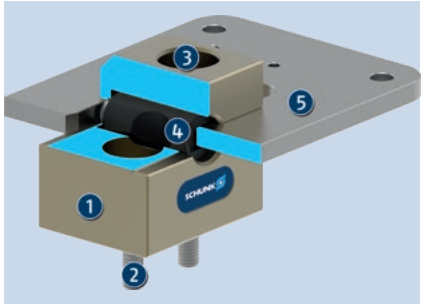

When the basic BSWS-BR is moved into the storage station BSWS-SR, the locking pin is pressed against a spring and thus unlocked. It is now possible to retract/extend the adapter pin BSWS-AR into the basic BSWS-BR.

1. Basic jaw quick-change system BSWS-BR
2. Fitting for fastening of the workpiece-specific gripper finger
3. Mounting bore for jaw quick-change adapter BSWS-AR
4. Spring preloaded locking pin
5. Deposit station BSWS-SR

BSWS-BR in unlocked status in the deposit station BSWS-SR with adapter pin BSWS-AR

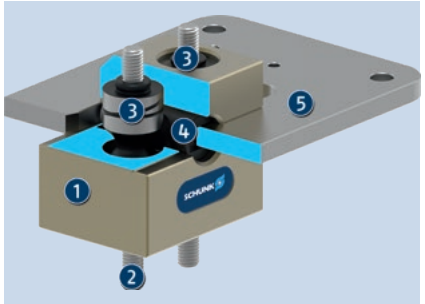

To lock the adapter pins BSWS-AR in the basic BSWS-BR, it is only necessary to move out of the deposit station BSWS-SR.

1. Basic jaw quick-change system BSWS-BR
2. Fitting for fastening of the workpiece-specific gripper finger
3. BSWS-AR jaw quick-change adapter
4. Spring preloaded locking pin
5. Deposit station BSWS-SR

BSWS-BR in locked status with adapter pin BSWS-AR

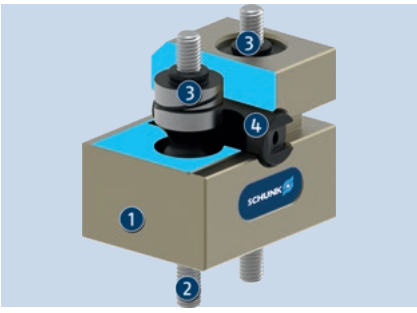

The spring-preloaded locking pin is pressed back into the locked status by the installed spring, creating a positive fit with the two adapter pins BSWS-AR. The spring force then prevents the gripper fingers from falling out again.

1. Basic jaw quick-change system BSWS-BR
2. Fitting for fastening of the work-piece-specific gripper finger
3. BSWS-AR jaw quick-change adapter
4. Spring preloaded locking pin

Deposit station BSWS-SR

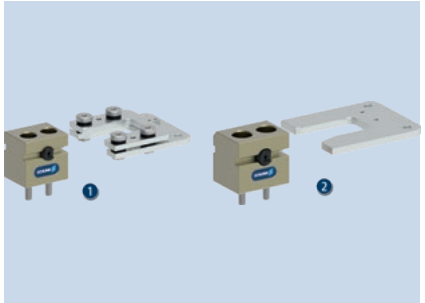

The deposit stations in sizes 50 – 100 are also suitable for operation with cobots without overloading them thanks to their integrated elastic mounting. From size 125 onwards, the deposit stations are configured without elastic mounting.

1. Size 50 – 100
2. Sizes 125 – 300

Gripper finger change in 3 steps

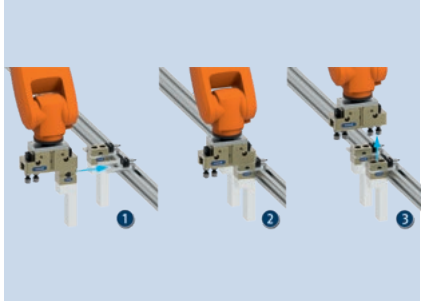

After pre-positioning, the actual change takes place by moving into the deposit station. During retraction, the locking mechanism is actuated. As a result, the gripper finger remains in the deposit station when it is extended upwards.

1. Prepositioning
2. Moving into the deposit station and unlocking the basic jaw quick-change system BSWS-BR
3. Extending and depositing the workpiece-specific gripper finger

Inductive monitoring of the presence of the BSWS-R in the BSWS-SR

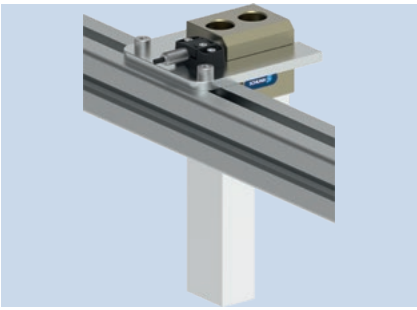

For monitoring the presence of the basic BSWS-BR in the deposit station BSWS-SR, it can be equipped with an inductive proximity switch.

RFID data carrier

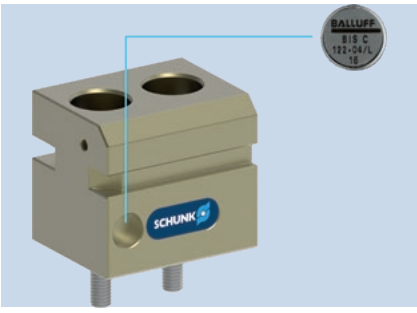

The basic BSWS-BR is prepared for mounting an RFID data carrier. Mounting of an RFID data carrier according to DIN 69873 enables the coding of the workpiece-specific gripper fingers.

General notes about the series

Actuation: Automatic

Warranty: 24 months

Scope of delivery: The base of the jaw quick-change system BSWS-BR (1 piece per ID), the jaw quick-change adapters BSWS-AR (2 pieces per ID) and the deposit station BSWS-SR (1 piece per ID) must be ordered separately.

Load limits: The max. permissible moment of load resulting from the finger length, the force, as well as the loads occurring from acceleration/torques must not be exceeded. The same applies to the max. permissible force Fx. Independently of this, attention needs to be paid to the max. permissible finger length and the permissible load values for the gripper used.

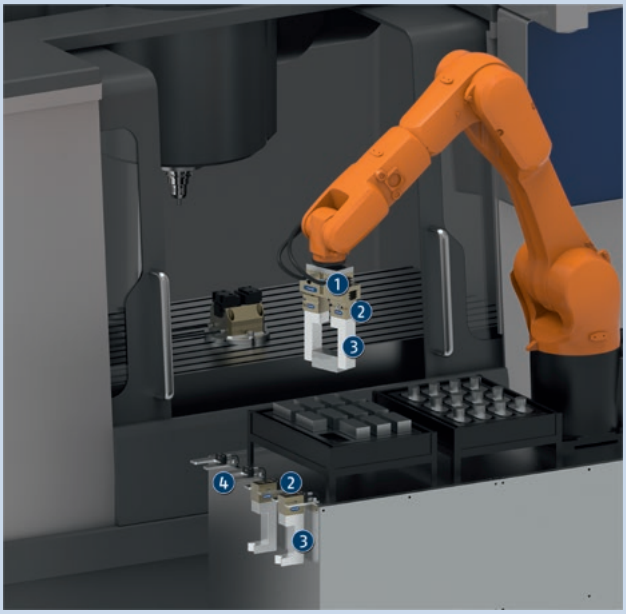

Application example

Gripping unit with jaw quick-change system for automatic change of the workpiece-specific gripper fingers

1. 2-finger parallel gripper PGN-plus-P
2. Jaw quick-change system BSWS-R
3. Workpiece-specific gripper fingers
4. Deposit station

SCHUNK offers more ...

The following components make the product even more productive – the suitable addition for the highest functionality, flexibility, reliability, and controlled production.

2-finger parallel gripper

3-Finger Centric Gripper

Gripper with intermediate jaw

electrical 2-finger parallel gripper

ⓘ For more information on these products can be found on the following product pages or at schunk.com.

Options and special information

BSWS-AR: It is not possible to combine BSWS-AR adapter pins with grippers in the dust-tight version. Please feel free to contact us for alternative solution proposals.

BSWS-R-PGZN-plus 50

Automatic jaw quick-change system

Load diagram

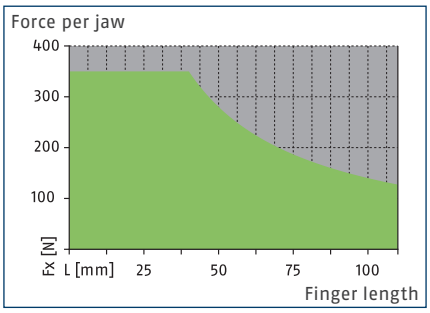

Permitted range

Inadmissible range

Dimensions and maximum loads

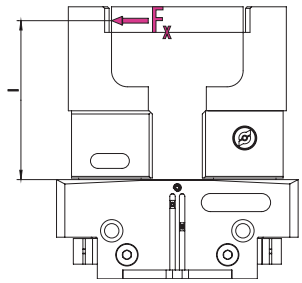

For values see technical data table

ⓘ The indicated torques and forces are static values, apply for each base jaw, and may occur simultaneously.

Technical data

Description		BSWS-BR 50
ID		1555889
Weight	[kg]	0.03
Number per ID		1
Min./max. ambient temperature	[°C]	5/130
Load limits		
Max. permissible loading torque	[Nm]	14
Max. perm. force Fx	[N]	350
Adapter pin		
Description		BSWS-AR 50
ID		0300091
Weight	[kg]	0.01
Number per ID		2
Min./max. ambient temperature	[°C]	5/130

Jaw quick-change system BSWS-R

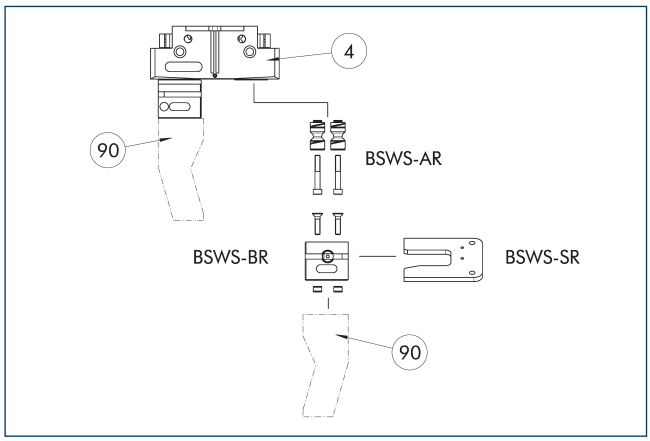

(4) Grippers

(90) Customized gripper fingers

The drawing shows the design and an overview of the components of the jaw quick-change system BSWS-R.

Adapter pin BSWS-AR 50

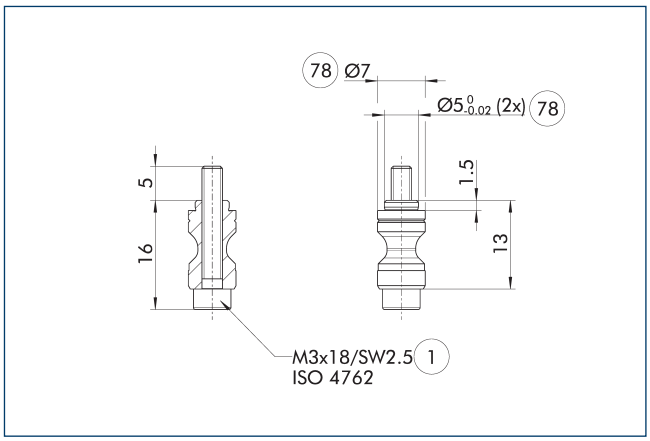

(1) Gripper connection

(78) Fit for centering

BSWS-AR is not compatible with the precision versions 788864of the grippers, as the connection fits are of different sizes.

ⓘ Two adapter pins BSWS-AR, incl. screws, are included in the scope of delivery.

Jaw quick-change system BSWS-BR 50

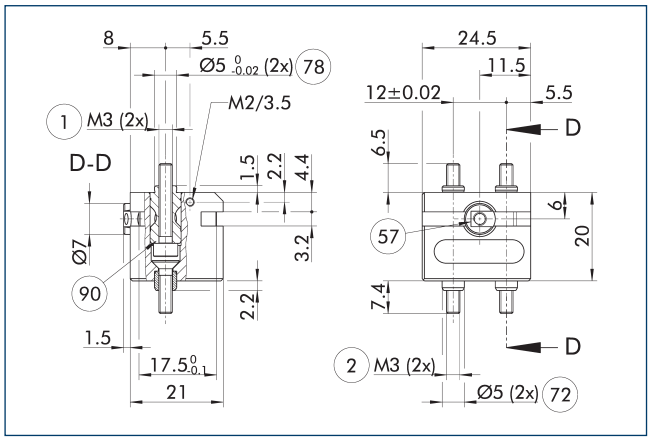

(1) Gripper connection

(2) Finger connection

(57) Locking

(72) Fit for centering sleeves

(78) Fit for centering

(90) Adapter pins BSWS-AR (to be ordered optionally)

The drawing shows the automatic jaw quick-change system BSWS-R.

ⓘ The adapter pins BSWS-AR shown are not included in the scope of delivery for the BSWS-BR and must be ordered separately.

Design of deposit station

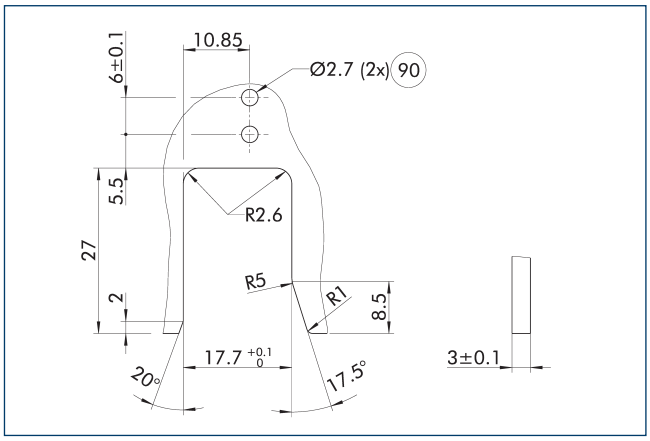

(90) Bores for inductive monitoring

The drawing shows the manufacturing dimensions of the contour for depositing the basic jaw quick-change system BSWS-BR.

BSWS-R-PGZN-plus 50

Automatic jaw quick-change system

Deposit station BSWS-SR

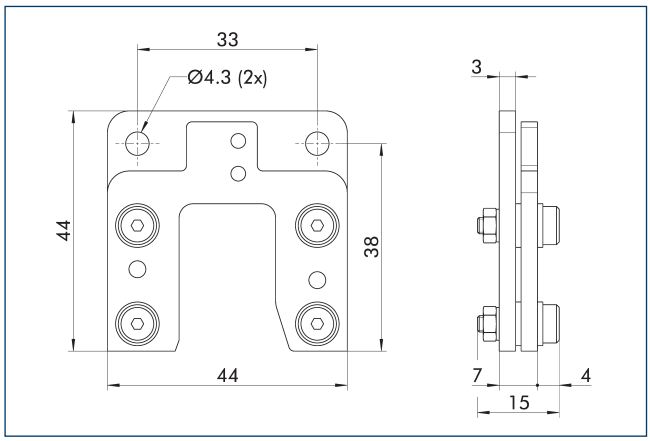

Description	ID	Scope of delivery
Storage system		
BSWS-SR 50	1555948	1

Attachment kit for proximity switch IN 40

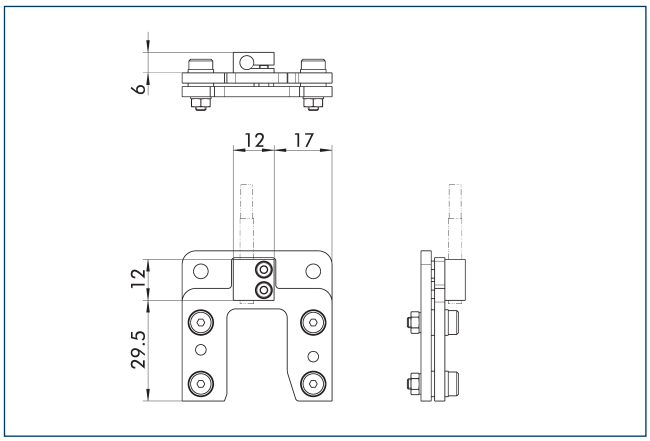

End position monitoring can be mounted with an attachment kit.

Description	ID	Scope of delivery
Attachment kit for proximity switch		
AS-IN40-BSWS-SR 50/64	1561455	1

ⓘ This attachment kit needs to be ordered optionally as an accessory.

IN 40 inductive proximity switches

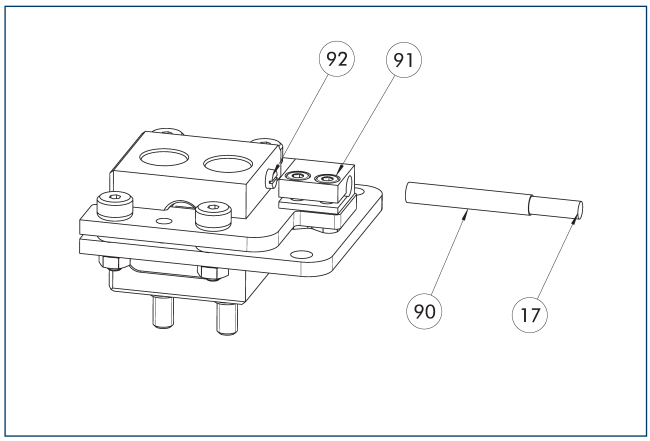

(17) Cable outlet
(90) Sensor IN ...
(91) Sensor bracket
(92) Sensor screw

End position monitoring can be mounted with an attachment kit.

Description	ID	Scope of delivery
Attachment kit for proximity switch		
AS-IN40-BSWS-SR 50/64	1561455	1
Inductive proximity switch		
IN 40-S-M12	0301574	
IN 40-S-M8	0301474	
INK 40-S	0301555	

ⓘ One sensor (closer/S) is required per deposit station, optionally a cable extension. This attachment kit needs to be ordered optionally as an accessory. Please consider the minimum permissible bending radii for sensor cables. These are generally 35 mm.

BSWS-R-PGZN-plus 64

Automatic jaw quick-change system

Load diagram

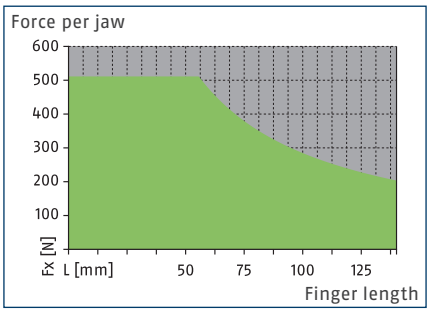

Permitted range

Inadmissible range

Dimensions and maximum loads

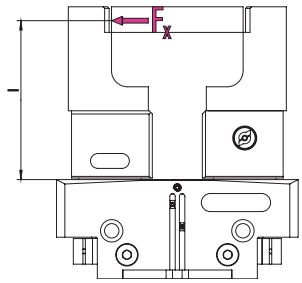

For values see technical data table

ⓘ The indicated torques and forces are static values, apply for each base jaw, and may occur simultaneously.

Technical data

Description		BSWS-BR 64	BSWS-BR 64
ID		1555914	1555914
Weight	[kg]	0.05	0.05
Number per ID		1	1
Min./max. ambient temperature	[°C]	5/130	5/130
Load limits			
Max. permissible loading torque	[Nm]	29	29
Max. perm. force Fx	[N]	510	510
Adapter pin			
Description		BSWS-AR 64	BSWS-AR 10
ID		0300092	1515447
Weight	[kg]	0.015	0.015
Number per ID		2	2
Min./max. ambient temperature	[°C]	5/130	5/130

Jaw quick-change system BSWS-R

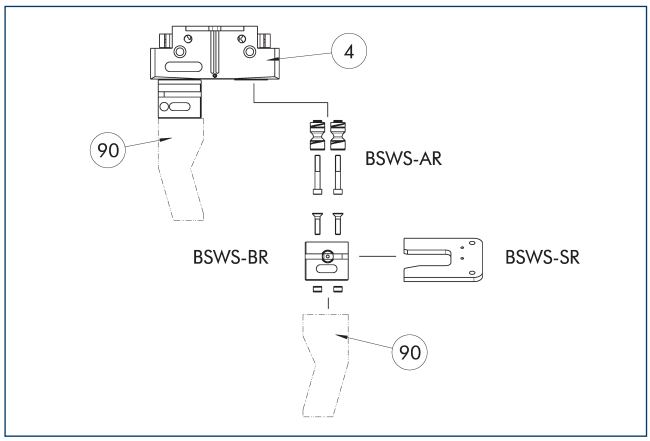

(4) Grippers (90) Customized gripper fingers

The drawing shows the design and an overview of the components of the jaw quick-change system BSWS-R.

Adapter pin BSWS-AR 64

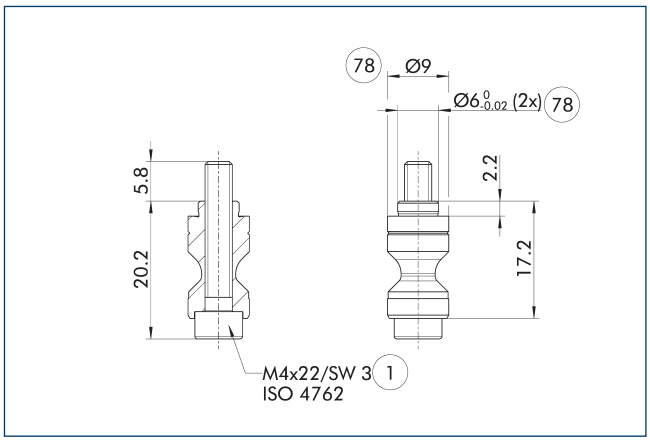

(1) Gripper connection (78) Fit for centering

BSWS-AR is not compatible with the precision versions 788864of the grippers, as the connection fits are of different sizes.

ⓘ Two adapter pins BSWS-AR, incl. screws, are included in the scope of delivery.

Adapter pin BSWS-AR 10

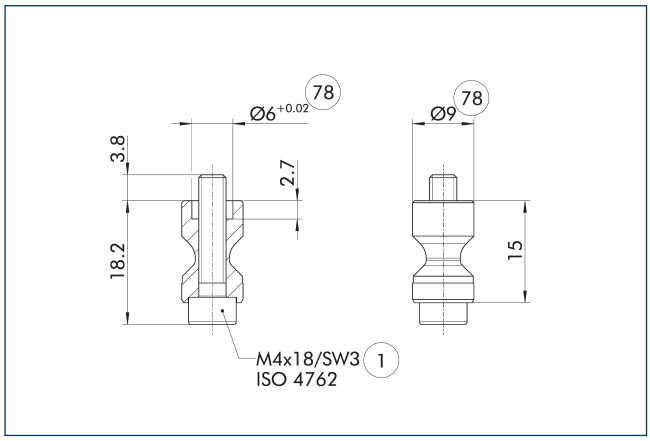

(1) Gripper connection (78) Fit for centering

These BSWS-AR bolts are particularly suitable for the gripper series PGL-plus-P, for which the centering sleeves are milled on the base jaw of the gripper.

ⓘ Two adapter pins BSWS-AR, incl. screws, are included in the scope of delivery.

Jaw quick-change system BSWS-BR 64

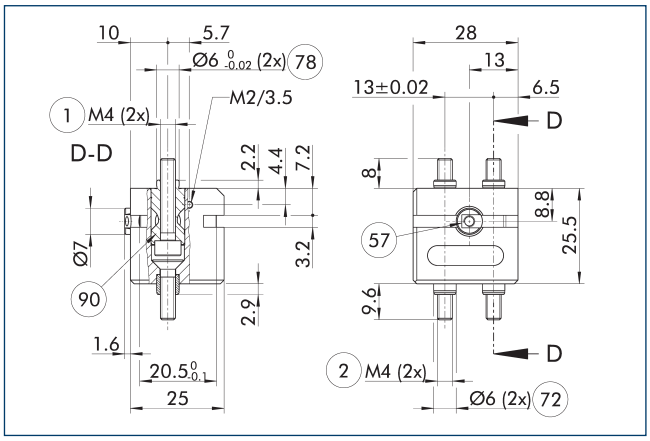

(1) Gripper connection
(2) Finger connection
(57) Locking
(72) Fit for centering sleeves
(78) Fit for centering
(90) Adapter pins BSWS-AR (to be ordered optionally)

The drawing shows the automatic jaw quick-change system BSWS-R.

ⓘ The adapter pins BSWS-AR shown are not included in the scope of delivery for the BSWS-BR and must be ordered separately.

Design of deposit station

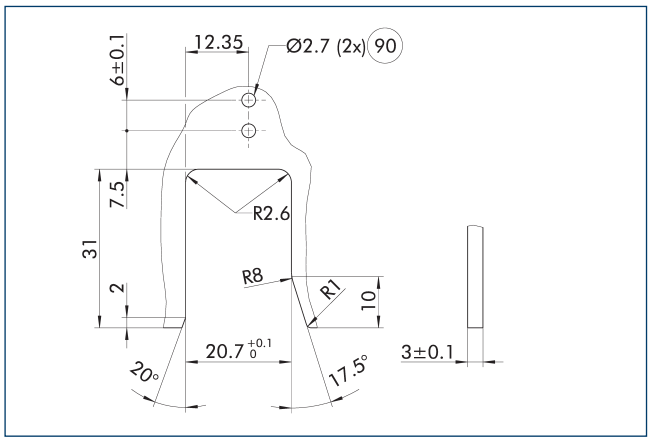

90 Bores for inductive monitoring

The drawing shows the manufacturing dimensions of the contour for depositing the basic jaw quick-change system BSWS-BR.

Deposit station BSWS-SR

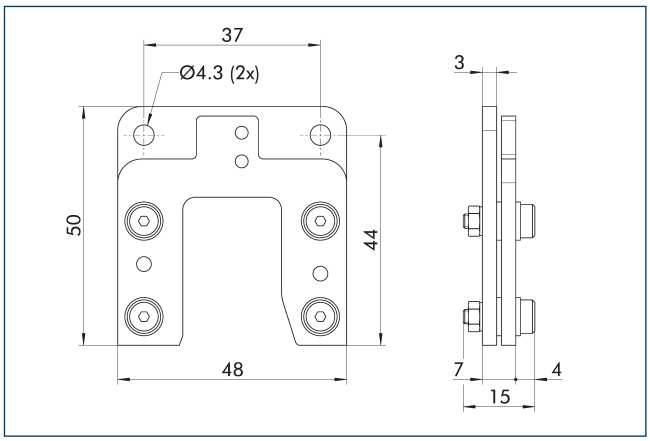

Description	ID	Scope of delivery
Storage system		
BSWS-SR 64	1555950	1

Attachment kit for proximity switch IN 40

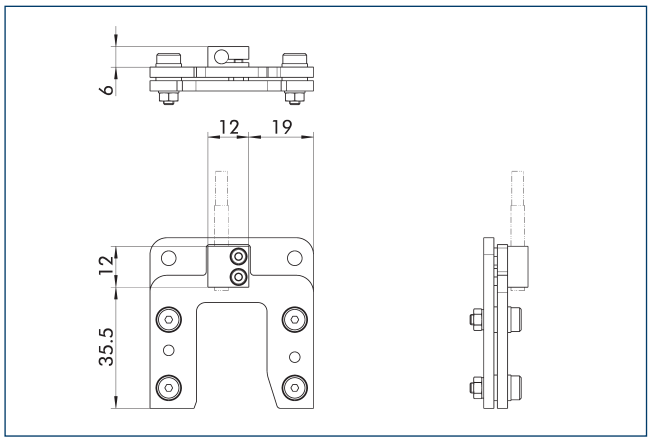

End position monitoring can be mounted with an attachment kit.

Description	ID	Scope of delivery
Attachment kit for proximity switch		
AS-IN40-BSWS-SR 50/64	1561455	1

ⓘ This attachment kit needs to be ordered optionally as an accessory.

IN 40 inductive proximity switches

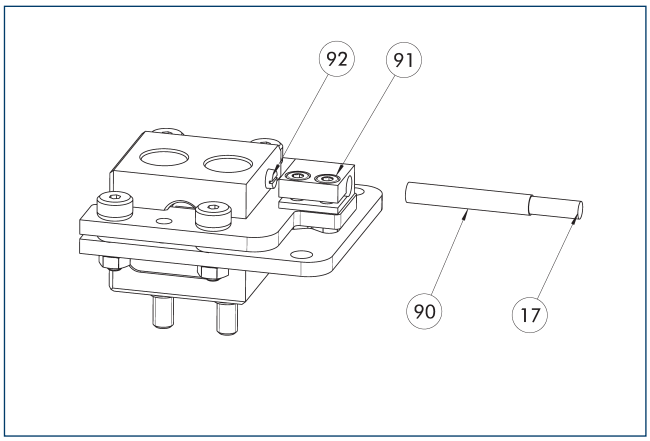

17 Cable outlet
90 Sensor IN ...
91 Sensor bracket
92 Sensor screw

End position monitoring can be mounted with an attachment kit.

Description	ID	Scope of delivery
Attachment kit for proximity switch		
AS-IN40-BSWS-SR 50/64	1561455	1
Inductive proximity switch		
IN 40-S-M12	0301574	
IN 40-S-M8	0301474	
INK 40-S	0301555	

ⓘ One sensor (closer/S) is required per deposit station, optionally a cable extension. This attachment kit needs to be ordered optionally as an accessory. Please consider the minimum permissible bending radii for sensor cables. These are generally 35 mm.

BSWS-R-PGZN-plus 80

Automatic jaw quick-change system

Load diagram

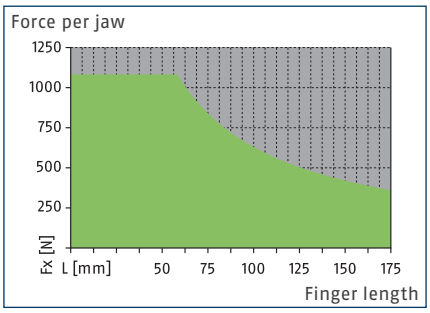

Permitted range

Inadmissible range

Dimensions and maximum loads

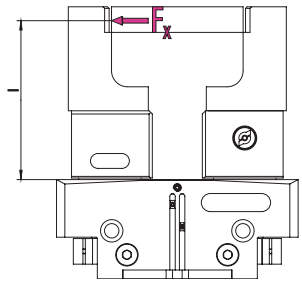

For values see technical data table

ⓘ The indicated torques and forces are static values, apply for each base jaw, and may occur simultaneously.

Technical data

Description		BSWS-BR 80	BSWS-BR 80
ID		1555917	1555917
Weight	[kg]	0.07	0.07
Number per ID		1	1
Min./max. ambient temperature	[°C]	5/130	5/130
Load limits			
Max. permissible loading torque	[Nm]	63	63
Max. perm. force Fx	[N]	1080	1080
Adapter pin			
Description		BSWS-AR 80	BSWS-AR 13
ID		0300093	1515448
Weight	[kg]	0.03	0.03
Number per ID		2	2
Min./max. ambient temperature	[°C]	5/130	5/130

Jaw quick-change system BSWS-R

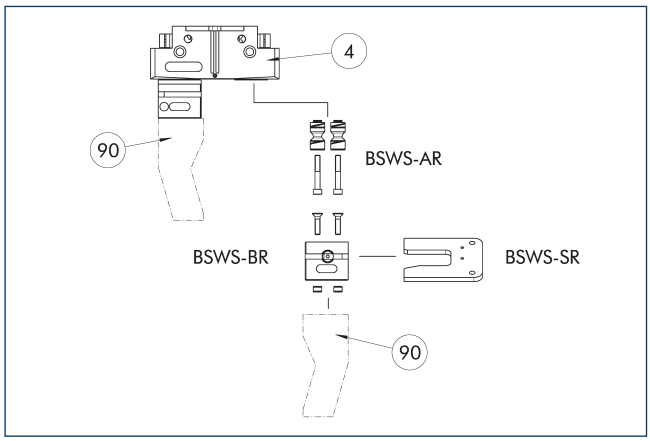

(4) Grippers (90) Customized gripper fingers

The drawing shows the design and an overview of the components of the jaw quick-change system BSWS-R.

Adapter pin BSWS-AR 80

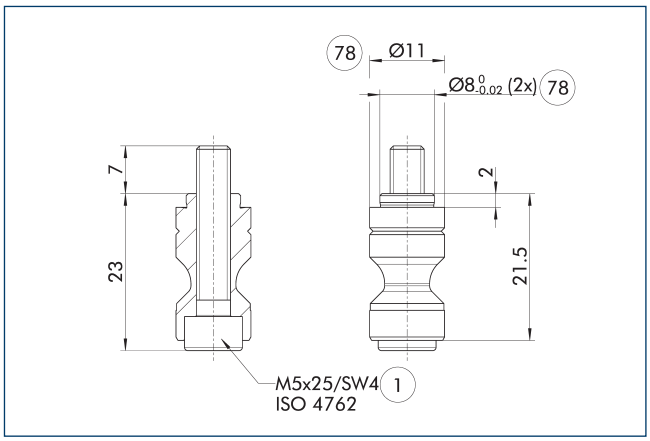

(1) Gripper connection (78) Fit for centering

BSWS-AR is not compatible with the precision versions 788864of the grippers, as the connection fits are of different sizes.

ⓘ Two adapter pins BSWS-AR, incl. screws, are included in the scope of delivery.

Adapter pin BSWS-AR 13

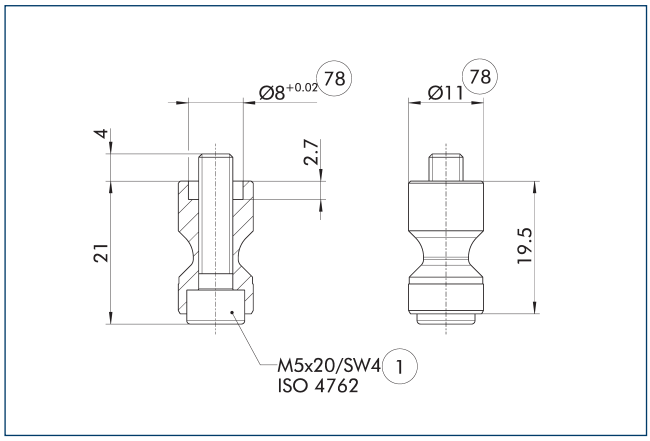

(1) Gripper connection (78) Fit for centering

These BSWS-AR bolts are particularly suitable for the gripper series PGL-plus-P, for which the centering sleeves are milled on the base jaw of the gripper.

ⓘ Two adapter pins BSWS-AR, incl. screws, are included in the scope of delivery.

Jaw quick-change system jaw BSWS-BR 80

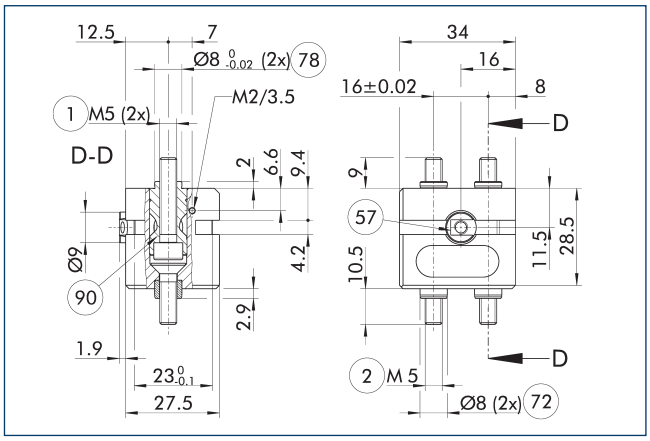

(1) Gripper connection
(2) Finger connection
(57) Locking
(72) Fit for centering sleeves
(78) Fit for centering
(90) Adapter pins BSWS-AR (to be ordered optionally)

The drawing shows the automatic jaw quick-change system BSWS-R.

ⓘ The adapter pins BSWS-AR shown are not included in the scope of delivery for the BSWS-BR and must be ordered separately.

Design of deposit station

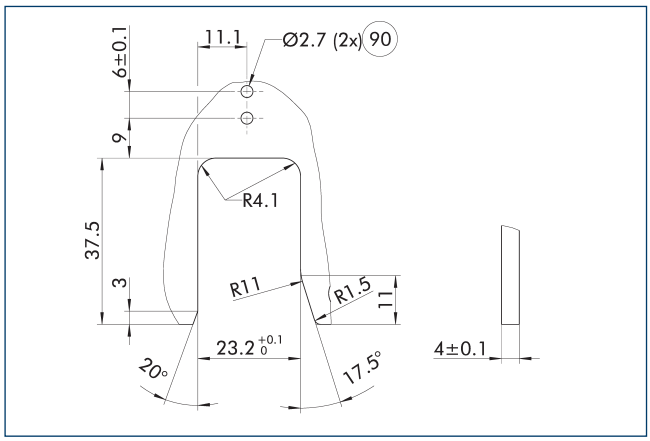

90 Bores for inductive monitoring

The drawing shows the manufacturing dimensions of the contour for depositing the basic jaw quick-change system BSWS-BR.

Deposit station BSWS-SR

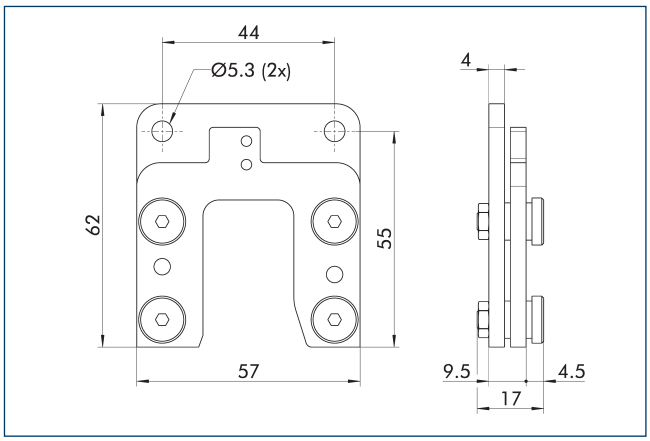

Description	ID	Scope of delivery
Storage system		
BSWS-SR 80	1555951	1

Attachment kit for proximity switch IN 40

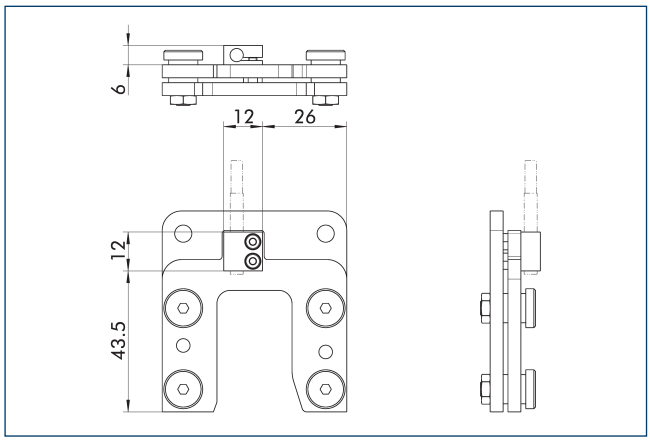

End position monitoring can be mounted with an attachment kit.

Description	ID	Scope of delivery
Attachment kit for proximity switch		
AS-IN40-BSWS-SR 80/100	1561458	1

ⓘ This attachment kit needs to be ordered optionally as an accessory.

IN 40 inductive proximity switches

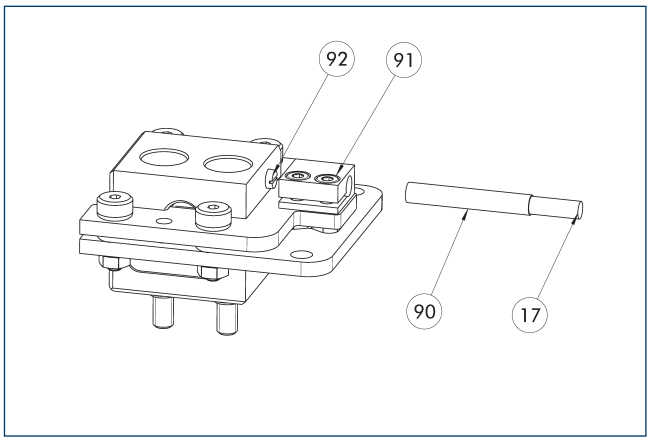

17 Cable outlet
90 Sensor IN ...
91 Sensor bracket
92 Sensor screw

End position monitoring can be mounted with an attachment kit.

Description	ID	Scope of delivery
Attachment kit for proximity switch		
AS-IN40-BSWS-SR 80/100	1561458	1
Inductive proximity switch		
IN 40-S-M12	0301574	
IN 40-S-M8	0301474	
INK 40-S	0301555	

ⓘ One sensor (closer/S) is required per deposit station, optionally a cable extension. This attachment kit needs to be ordered optionally as an accessory. Please consider the minimum permissible bending radii for sensor cables. These are generally 35 mm.

BSWS-R-PGZN-plus 100

Automatic jaw quick-change system

Load diagram

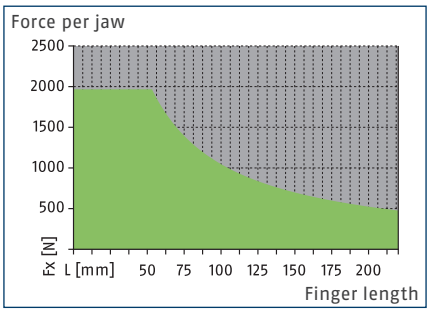

Permitted range

Inadmissible range

Dimensions and maximum loads

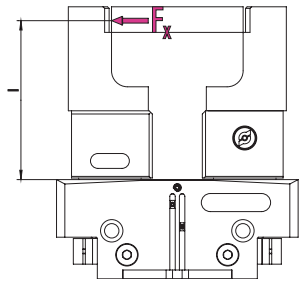

For values see technical data table

ⓘ The indicated torques and forces are static values, apply for each base jaw, and may occur simultaneously.

Technical data

Description		BSWS-BR 100	BSWS-BR 100
ID		1555933	1555933
Weight	[kg]	0.15	0.15
Number per ID		1	1
Min./max. ambient temperature	[°C]	5/130	5/130
Load limits			
Max. permissible loading torque	[Nm]	105	105
Max. perm. force Fx	[N]	1960	1960
Adapter pin			
Description		BSWS-AR 100	BSWS-AR 16
ID		0300094	1515470
Weight	[kg]	0.15	0.06
Number per ID		2	2
Min./max. ambient temperature	[°C]	5/130	5/130

Jaw quick-change system BSWS-R

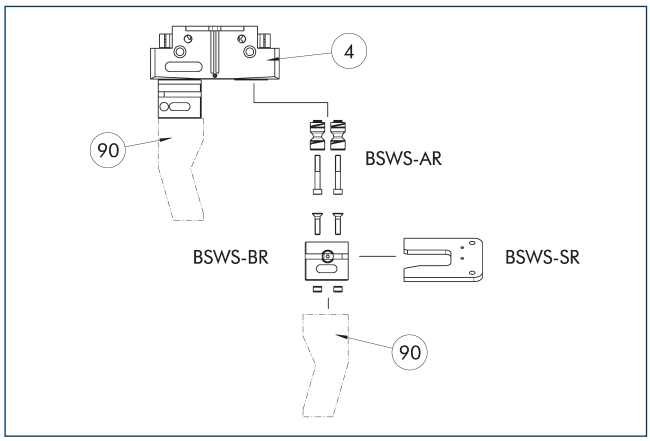

(4) Grippers (90) Customized gripper fingers

The drawing shows the design and an overview of the components of the jaw quick-change system BSWS-R.

Adapter pin BSWS-AR 100

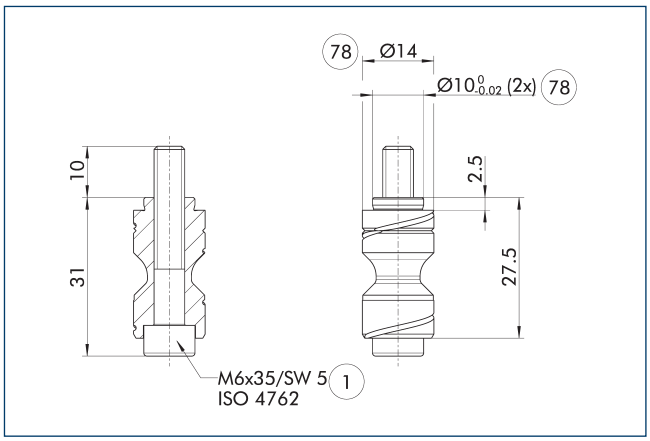

(1) Gripper connection (78) Fit for centering

BSWS-AR is not compatible with the precision versions 788864of the grippers, as the connection fits are of different sizes.

ⓘ Two adapter pins BSWS-AR, incl. screws, are included in the scope of delivery.

Adapter pin BSWS-AR 16

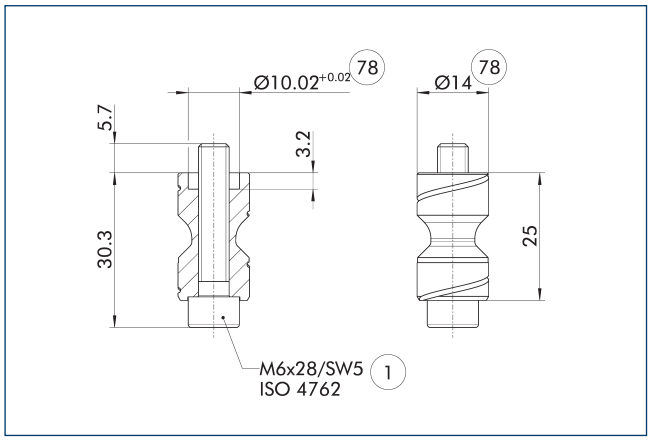

(1) Gripper connection (78) Fit for centering

These BSWS-AR bolts are particularly suitable for the gripper series PGL-plus-P, for which the centering sleeves are milled on the base jaw of the gripper.

ⓘ Two adapter pins BSWS-AR, incl. screws, are included in the scope of delivery.

Jaw quick-change system BSWS-BR-100

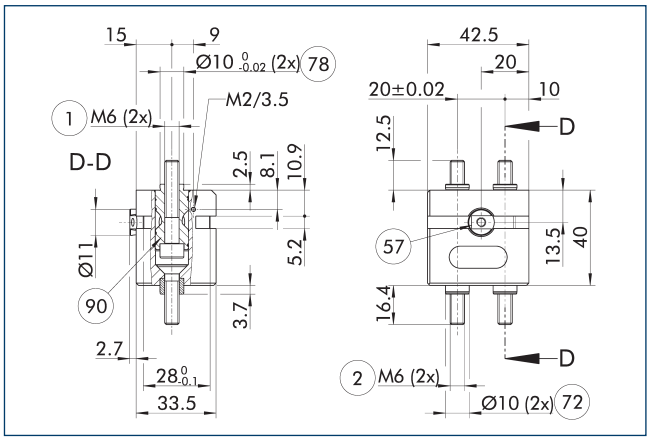

(1) Gripper connection
(2) Finger connection
(57) Locking
(72) Fit for centering sleeves
(78) Fit for centering
(90) Adapter pins BSWS-AR (to be ordered optionally)

The drawing shows the automatic jaw quick-change system BSWS-R.

ⓘ The adapter pins BSWS-AR shown are not included in the scope of delivery for the BSWS-BR and must be ordered separately.

BSWS-R-PGZN-plus 100

Automatic jaw quick-change system

Design of deposit station

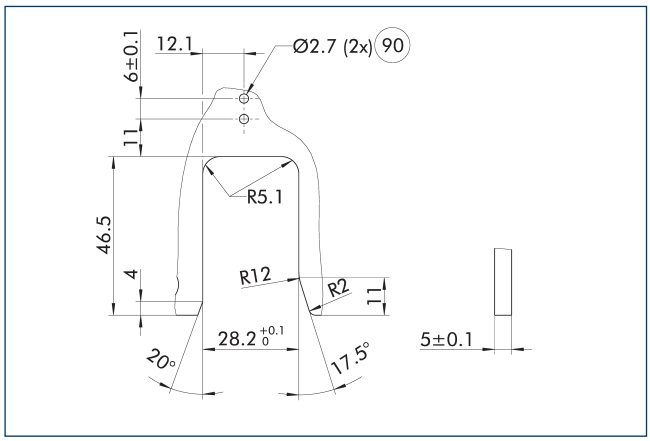

90 Bores for inductive monitoring

The drawing shows the manufacturing dimensions of the contour for depositing the basic jaw quick-change system BSWS-BR.

Deposit station BSWS-SR

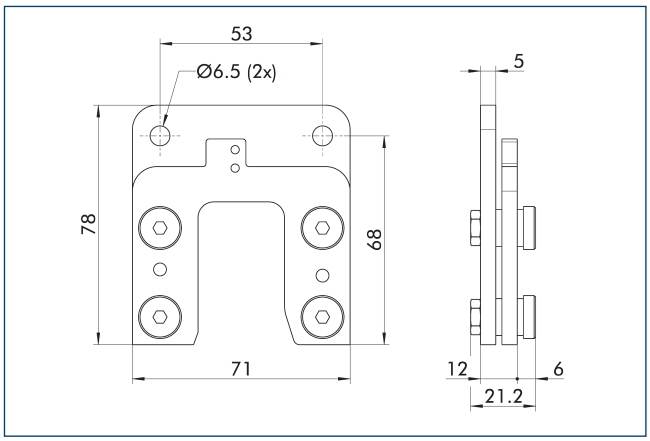

Description	ID	Scope of delivery
Storage system		
BSWS-SR 100	1555959	1

Attachment kit for proximity switch IN 40

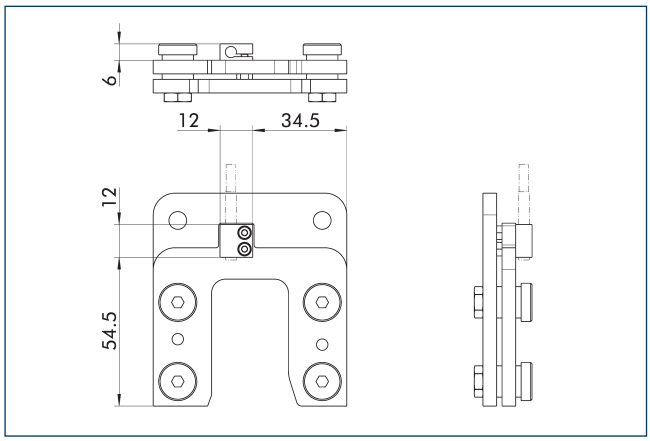

End position monitoring can be mounted with an attachment kit.

Description	ID	Scope of delivery
Attachment kit for proximity switch		
AS-IN40-BSWS-SR 80/100	1561458	1

ⓘ This attachment kit needs to be ordered optionally as an accessory.

IN 40 inductive proximity switches

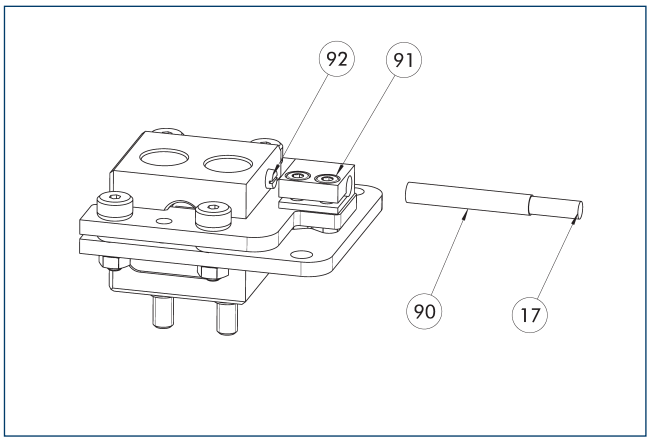

17 Cable outlet
90 Sensor IN ...
91 Sensor bracket
92 Sensor screw

End position monitoring can be mounted with an attachment kit.

Description	ID	Scope of delivery
Attachment kit for proximity switch		
AS-IN40-BSWS-SR 80/100	1561458	1
Inductive proximity switch		
IN 40-S-M12	0301574	
IN 40-S-M8	0301474	
INK 40-S	0301555	

ⓘ One sensor (closer/S) is required per deposit station, optionally a cable extension. This attachment kit needs to be ordered optionally as an accessory. Please consider the minimum permissible bending radii for sensor cables. These are generally 35 mm.

BSWS-R-PGZN-plus 125

Automatic jaw quick-change system

Load diagram

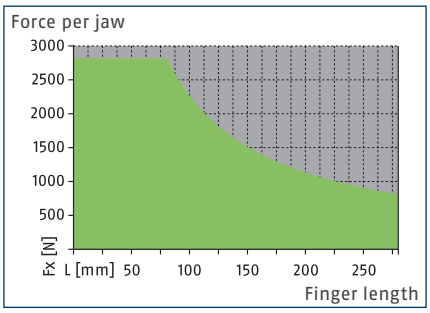

Permitted range

Inadmissible range

Dimensions and maximum loads

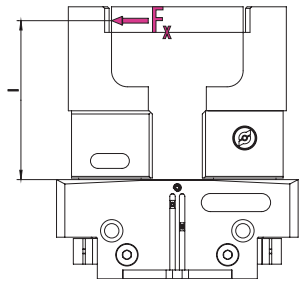

For values see technical data table

ⓘ The indicated torques and forces are static values, apply for each base jaw, and may occur simultaneously.

Technical data

Description		BSWS-BR 125	BSWS-BR 125
ID		1555937	1555937
Weight	[kg]	0.22	0.22
Number per ID		1	1
Min./max. ambient temperature	[°C]	5/130	5/130
Load limits			
Max. permissible loading torque	[Nm]	225	225
Max. perm. force Fx	[N]	2815	2815
Adapter pin			
Description		BSWS-AR 125	BSWS-AR 20
ID		0300095	1515474
Weight	[kg]	0.1	0.1
Number per ID		2	2
Min./max. ambient temperature	[°C]	5/130	5/130

Jaw quick-change system BSWS-R

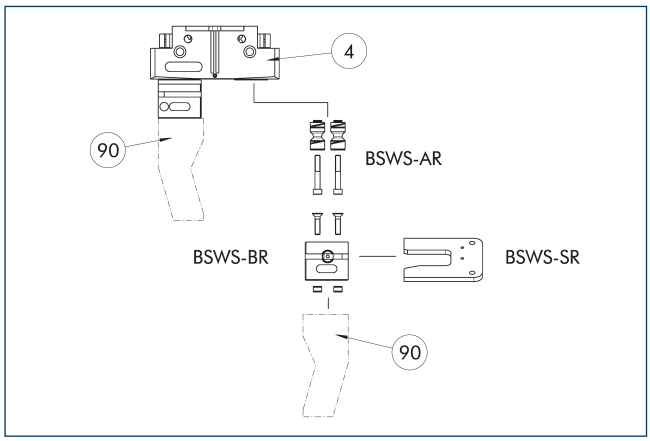

(4) Grippers (90) Customized gripper fingers

The drawing shows the design and an overview of the components of the jaw quick-change system BSWS-R.

Adapter pin BSWS-AR 125

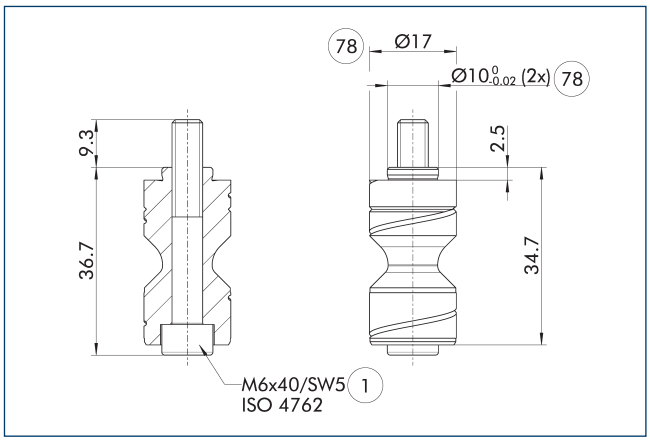

(1) Gripper connection (78) Fit for centering

BSWS-AR is not compatible with the precision versions 788864of the grippers, as the connection fits are of different sizes.

ⓘ Two adapter pins BSWS-AR, incl. screws, are included in the scope of delivery.

Adapter pin BSWS-AR 20

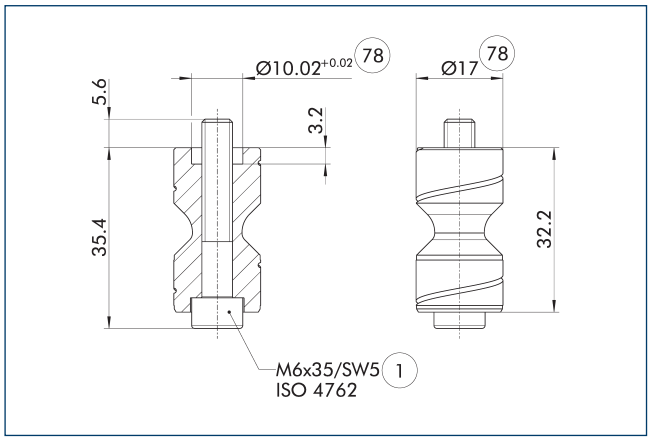

(1) Gripper connection (78) Fit for centering

These BSWS-AR bolts are particularly suitable for the gripper series PGL-plus-P, for which the centering sleeves are milled on the base jaw of the gripper.

ⓘ Two adapter pins BSWS-AR, incl. screws, are included in the scope of delivery.

Jaw quick-change system BSWS-BR 125

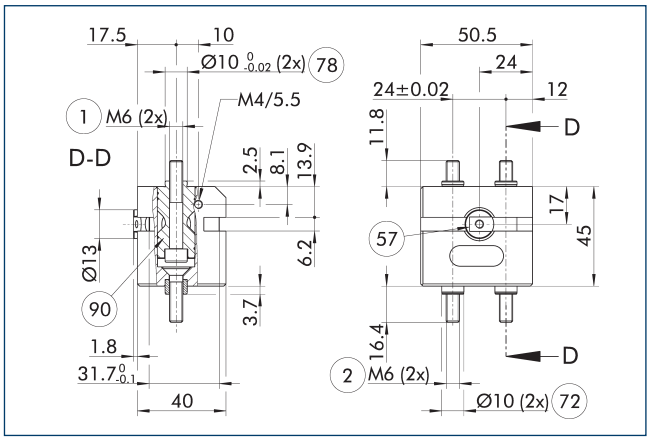

(1) Gripper connection
(2) Finger connection
(57) Locking
(72) Fit for centering sleeves
(78) Fit for centering
(90) Adapter pins BSWS-AR (to be ordered optionally)

The drawing shows the automatic jaw quick-change system BSWS-R.

ⓘ The adapter pins BSWS-AR shown are not included in the scope of delivery for the BSWS-BR and must be ordered separately.

BSWS-R-PGZN-plus 125

Automatic jaw quick-change system

Design of deposit station

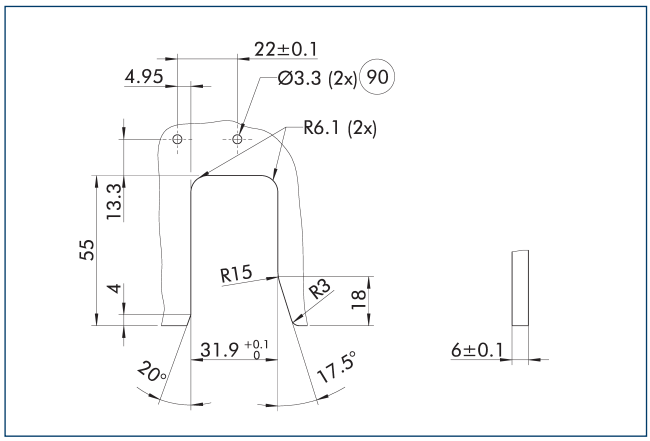

90 Bores for inductive monitoring

The drawing shows the manufacturing dimensions of the contour for depositing the basic jaw quick-change system BSWS-BR.

Deposit station BSWS-SR

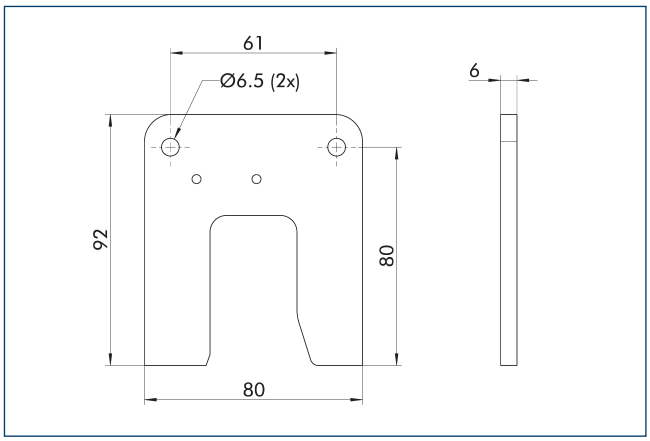

Description	ID	Scope of delivery
Storage system		
BSWS-SR 125	1555972	1

Attachment kit for proximity switch IN 80

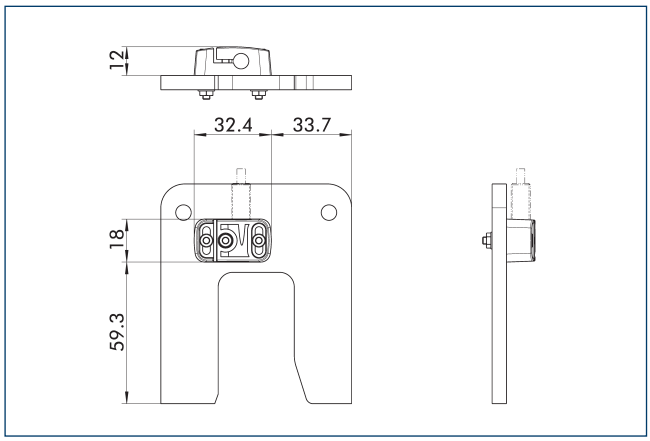

End position monitoring can be mounted with an attachment kit.

Description	ID	Scope of delivery
Attachment kit for proximity switch		
AS-IN80-BSWS-SR 125/160	1561467	1

ⓘ This attachment kit needs to be ordered optionally as an accessory.

IN 80 inductive proximity switches

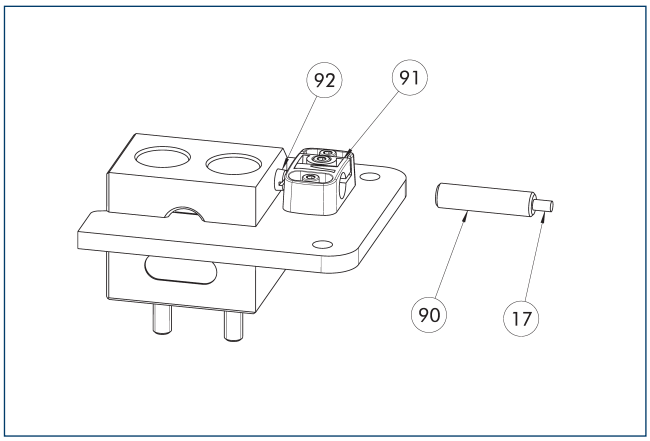

17 Cable outlet
91 Sensor bracket
90 Sensor IN ...
92 Sensor screw

End position monitoring can be mounted with an attachment kit.

Description	ID	Scope of delivery
Attachment kit for proximity switch		
AS-IN80-BSWS-SR 125/160	1561467	1
Inductive proximity switch		
IN 80-S-M12	0301578	
IN 80-S-M8	0301478	
INK 80-S	0301550	

ⓘ One sensor (closer/S) is required per deposit station, optionally a cable extension. This attachment kit needs to be ordered optionally as an accessory. Please consider the minimum permissible bending radii for sensor cables. These are generally 35 mm.

BSWS-R-PGZN-plus 160

Automatic jaw quick-change system

Load diagram

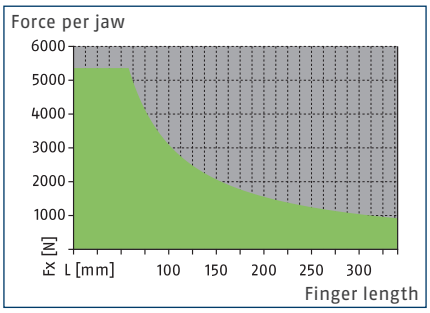

Permitted range

Inadmissible range

Dimensions and maximum loads

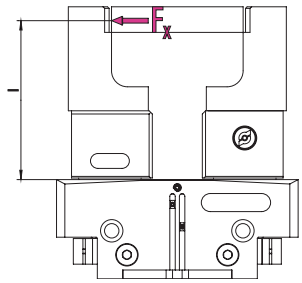

For values see technical data table

ⓘ The indicated torques and forces are static values, apply for each base jaw, and may occur simultaneously.

Technical data

Description		BSWS-BR 160	BSWS-BR 160
ID		1555940	1555940
Weight	[kg]	0.46	0.46
Number per ID		1	1
Min./max. ambient temperature	[°C]	5/130	5/130
Load limits			
Max. permissible loading torque	[Nm]	310	310
Max. perm. force Fx	[N]	5360	5360
Adapter pin			
Description		BSWS-AR 160	BSWS-AR 25
ID		0300096	1515477
Weight	[kg]	0.19	0.19
Number per ID		2	2
Min./max. ambient temperature	[°C]	5/130	5/130

Jaw quick-change system BSWS-R

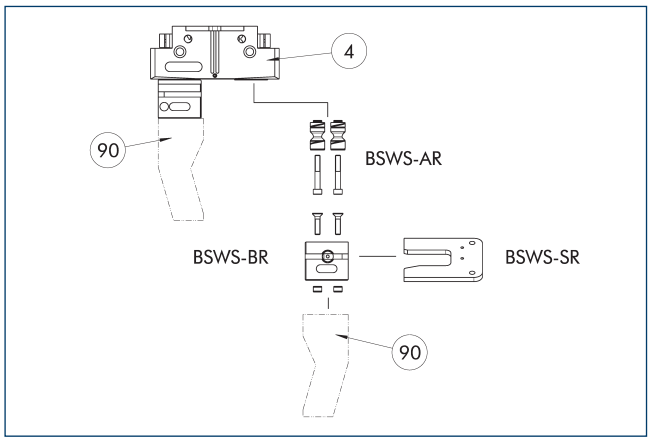

(4) Grippers (90) Customized gripper fingers

The drawing shows the design and an overview of the components of the jaw quick-change system BSWS-R.

Adapter pin BSWS-AR 160

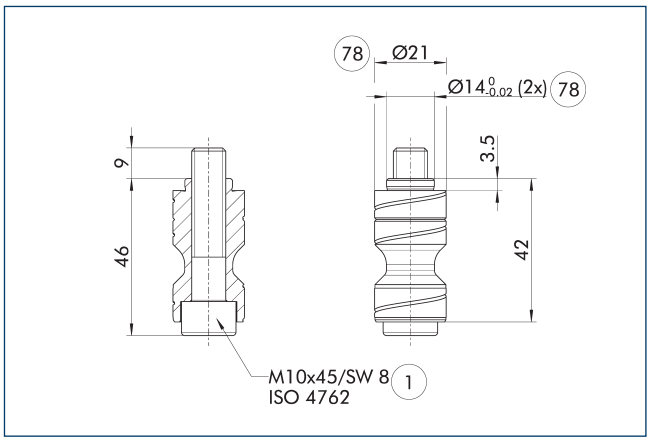

(1) Gripper connection (78) Fit for centering

BSWS-AR is not compatible with the precision versions 788864of the grippers, as the connection fits are of different sizes.

ⓘ Two adapter pins BSWS-AR, incl. screws, are included in the scope of delivery.

Adapter pin BSWS-AR 25

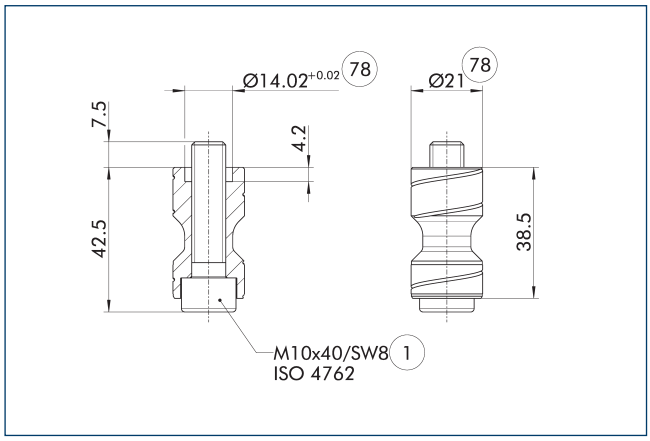

(1) Gripper connection (78) Fit for centering

These BSWS-AR bolts are particularly suitable for the gripper series PGL-plus-P, for which the centering sleeves are milled on the base jaw of the gripper.

ⓘ Two adapter pins BSWS-AR, incl. screws, are included in the scope of delivery.

Jaw quick-change system BSWS-BR 160

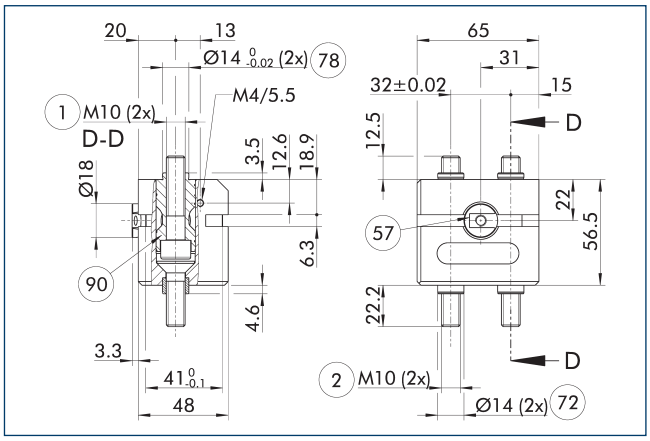

(1) Gripper connection
(2) Finger connection
(57) Locking
(72) Fit for centering sleeves
(78) Fit for centering
(90) Adapter pins BSWS-AR (to be ordered optionally)

The drawing shows the automatic jaw quick-change system BSWS-R.

ⓘ The adapter pins BSWS-AR shown are not included in the scope of delivery for the BSWS-BR and must be ordered separately.

BSWS-R-PGZN-plus 160

Automatic jaw quick-change system

Design of deposit station

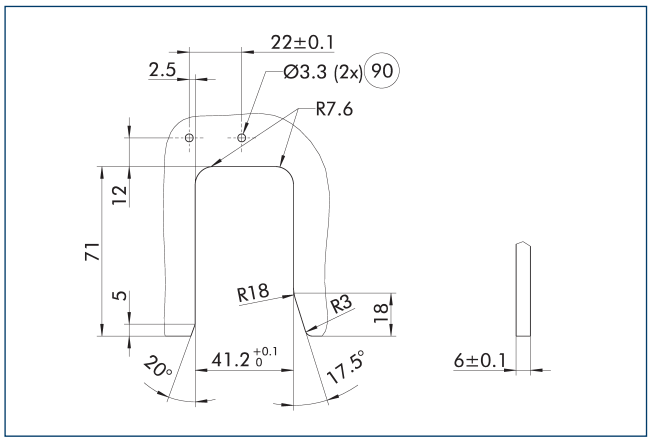

90 Bores for inductive monitoring

The drawing shows the manufacturing dimensions of the contour for depositing the basic jaw quick-change system BSWS-BR.

Deposit station BSWS-SR

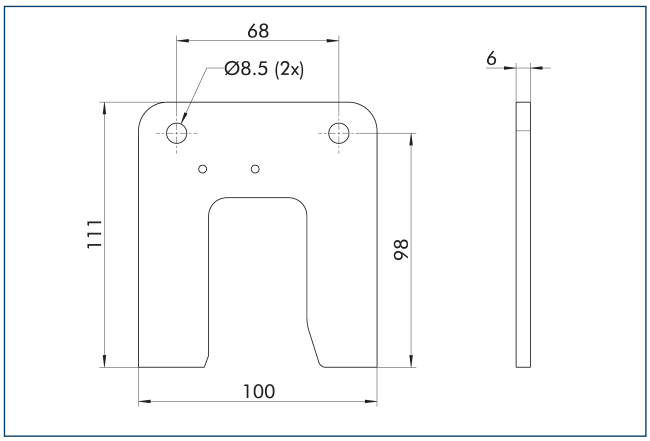

Description	ID	Scope of delivery
Storage system		
BSWS-SR 160	1555974	1

Attachment kit for proximity switch IN 80

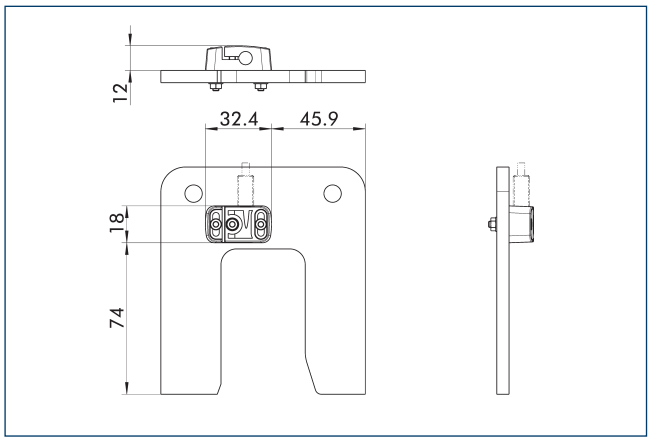

End position monitoring can be mounted with an attachment kit.

Description	ID	Scope of delivery
Attachment kit for proximity switch		
AS-IN80-BSWS-SR 125/160	1561467	1

ⓘ This attachment kit needs to be ordered optionally as an accessory.

IN 80 inductive proximity switches

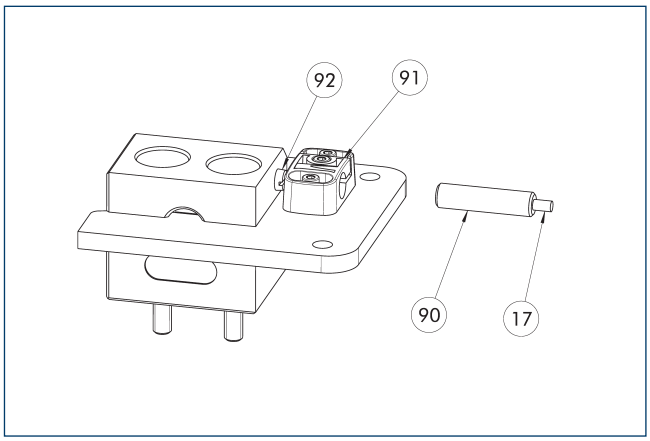

17 Cable outlet
91 Sensor bracket
90 Sensor IN ...
92 Sensor screw

End position monitoring can be mounted with an attachment kit.

Description	ID	Scope of delivery
Attachment kit for proximity switch		
AS-IN80-BSWS-SR 125/160	1561467	1
Inductive proximity switch		
IN 80-S-M12	0301578	
IN 80-S-M8	0301478	
INK 80-S	0301550	

ⓘ One sensor (closer/S) is required per deposit station, optionally a cable extension. This attachment kit needs to be ordered optionally as an accessory. Please consider the minimum permissible bending radii for sensor cables. These are generally 35 mm.

BSWS-R-PGZN-plus 200

Automatic jaw quick-change system

Load diagram

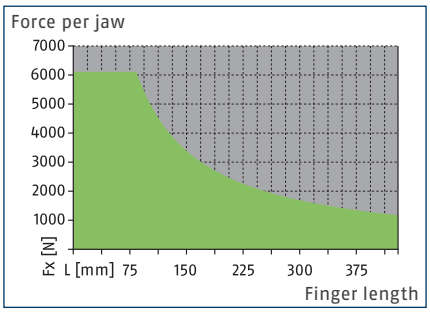

Permitted range

Inadmissible range

Dimensions and maximum loads

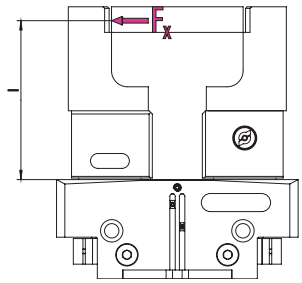

For values see technical data table

ⓘ The indicated torques and forces are static values, apply for each base jaw, and may occur simultaneously.

Technical data

Description		BSWS-BR 200
ID		1555942
Weight	[kg]	0.97
Number per ID		1
Min./max. ambient temperature	[°C]	5/130
Load limits		
Max. permissible loading torque	[Nm]	510
Max. perm. force Fx	[N]	6110
Adapter pin		
Description		BSWS-AR 200
ID		1453341
Weight	[kg]	0.45
Number per ID		2
Min./max. ambient temperature	[°C]	5/130

Jaw quick-change system BSWS-R

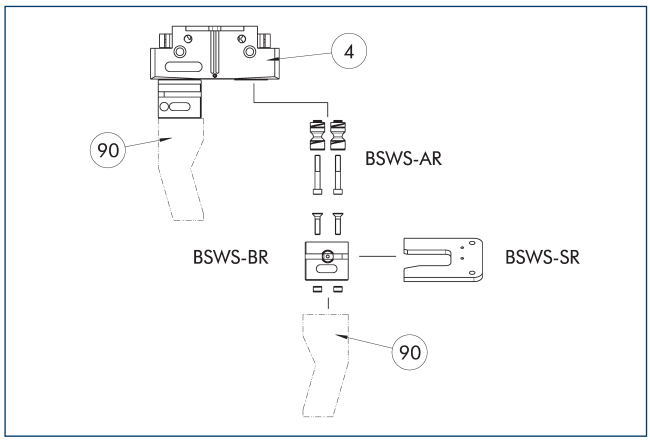

(4) Grippers

(90) Customized gripper fingers

The drawing shows the design and an overview of the components of the jaw quick-change system BSWS-R.

Adapter pin BSWS-AR 200

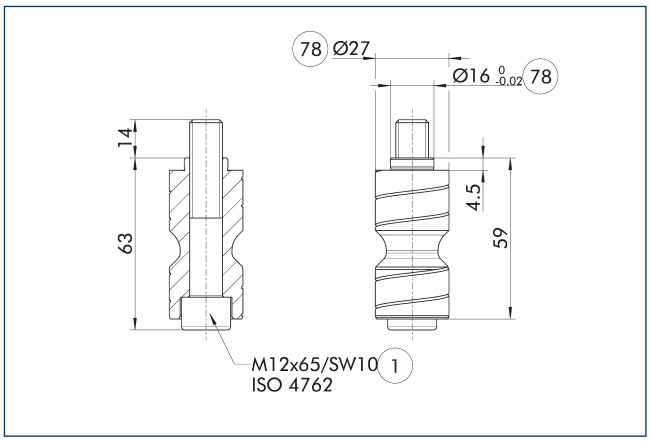

(1) Gripper connection

(78) Fit for centering

BSWS-AR is not compatible with the precision versions 788864of the grippers, as the connection fits are of different sizes.

ⓘ Two adapter pins BSWS-AR, incl. screws, are included in the scope of delivery.

Jaw quick-change system BSWS-BR 200

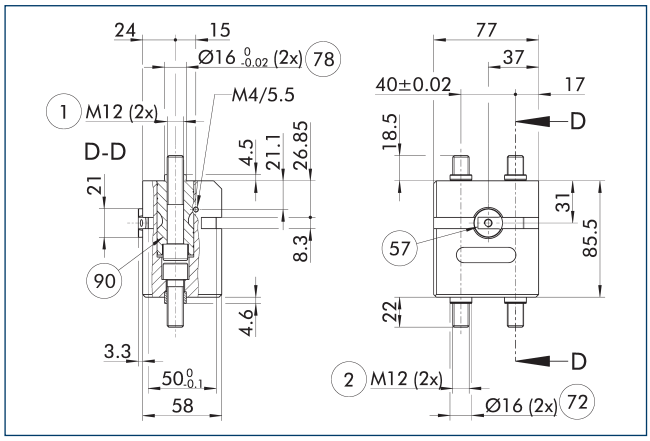

(1) Gripper connection

(2) Finger connection

(57) Locking

(72) Fit for centering sleeves

(78) Fit for centering

(90) Adapter pins BSWS-AR (to be ordered optionally)

The drawing shows the automatic jaw quick-change system BSWS-R.

ⓘ The adapter pins BSWS-AR shown are not included in the scope of delivery for the BSWS-BR and must be ordered separately.

Design of deposit station

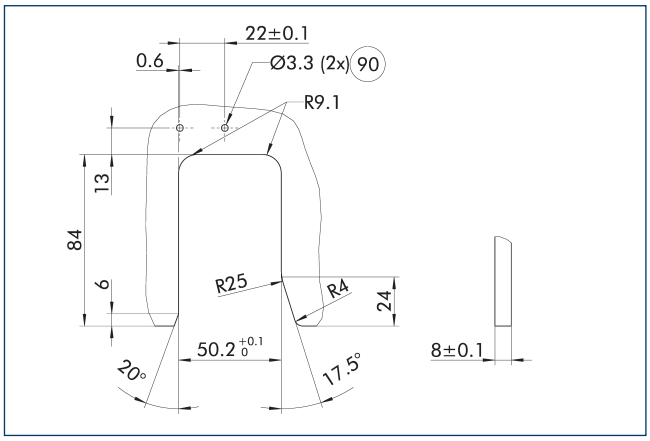

(90) Bores for inductive monitoring

The drawing shows the manufacturing dimensions of the contour for depositing the basic jaw quick-change system BSWS-BR.

Deposit station BSWS-SR

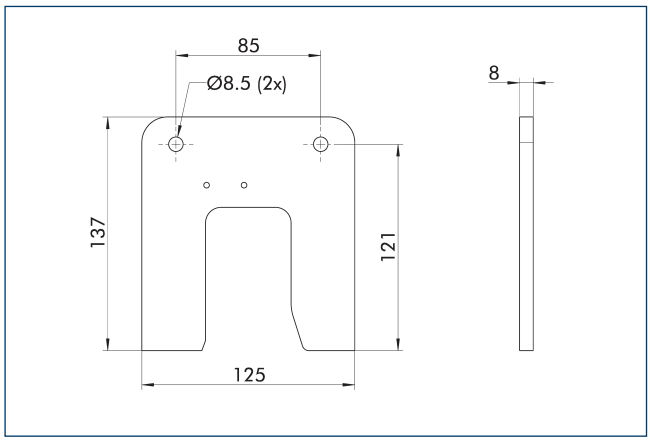

Description	ID	Scope of delivery
Storage system		
BSWS-SR 200	1555976	1

Attachment kit for proximity switch IN 80

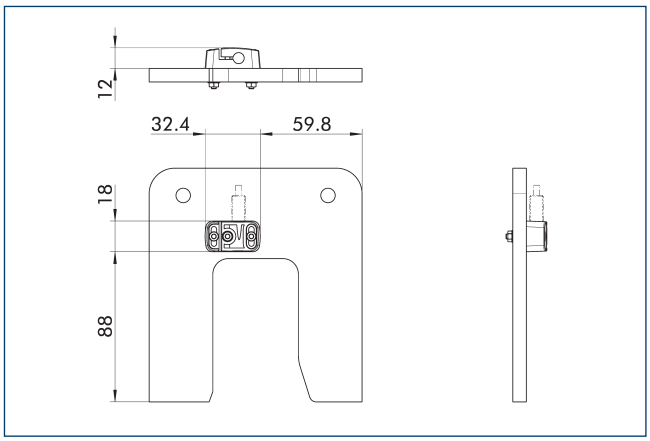

End position monitoring can be mounted with an attachment kit.

Description	ID	Scope of delivery
Attachment kit for proximity switch		
AS-IN80-BSWS-SR 200	1561469	1

ⓘ This attachment kit needs to be ordered optionally as an accessory.

IN 80 inductive proximity switches

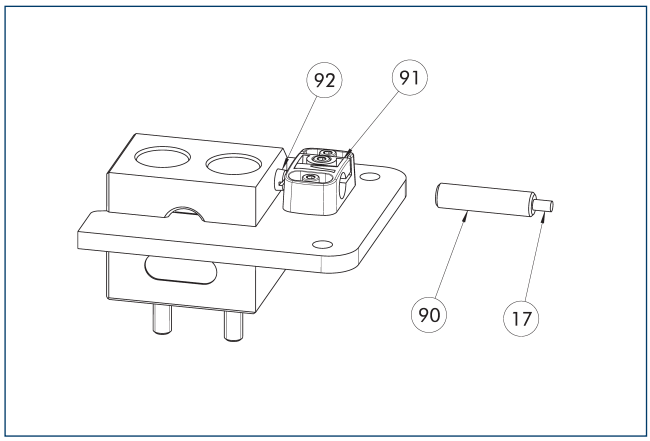

(17) Cable outlet
(90) Sensor IN ...
(91) Sensor bracket
(92) Sensor screw

End position monitoring can be mounted with an attachment kit.

Description	ID	Scope of delivery
Attachment kit for proximity switch		
AS-IN80-BSWS-SR 200	1561469	1
Inductive proximity switch		
IN 80-S-M12	0301578	
IN 80-S-M8	0301478	
INK 80-S	0301550	

ⓘ One sensor (closer/S) is required per deposit station, optionally a cable extension. This attachment kit needs to be ordered optionally as an accessory. Please consider the minimum permissible bending radii for sensor cables. These are generally 35 mm.

BSWS-R-PGZN-plus 240

Automatic jaw quick-change system

Load diagram

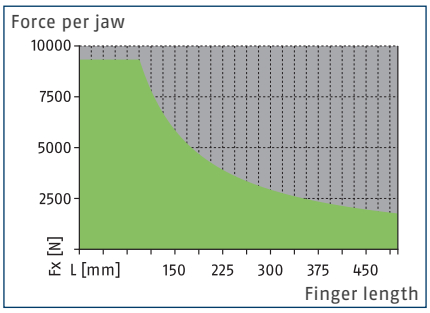

Permitted range

Inadmissible range

Dimensions and maximum loads

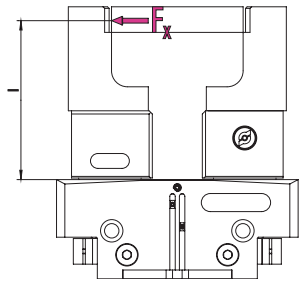

For values see technical data table

ⓘ The indicated torques and forces are static values, apply for each base jaw, and may occur simultaneously.

Technical data

Description		BSWS-BR 240
ID		1555943
Weight	[kg]	1.49
Number per ID		1
Min./max. ambient temperature	[°C]	5/130
Load limits		
Max. permissible loading torque	[Nm]	880
Max. perm. force Fx	[N]	9330
Adapter pin		
Description		BSWS-AR 240
ID		1453342
Weight	[kg]	0.71
Number per ID		2
Min./max. ambient temperature	[°C]	5/130

Jaw quick-change system BSWS-R

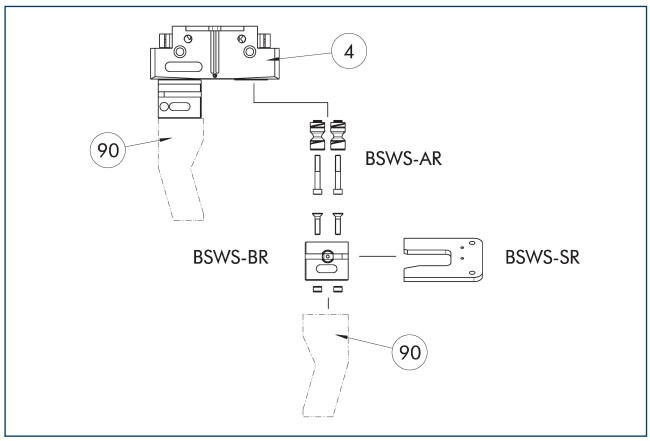

(4) Grippers

(90) Customized gripper fingers

The drawing shows the design and an overview of the components of the jaw quick-change system BSWS-R.

Adapter pin BSWS-AR 240

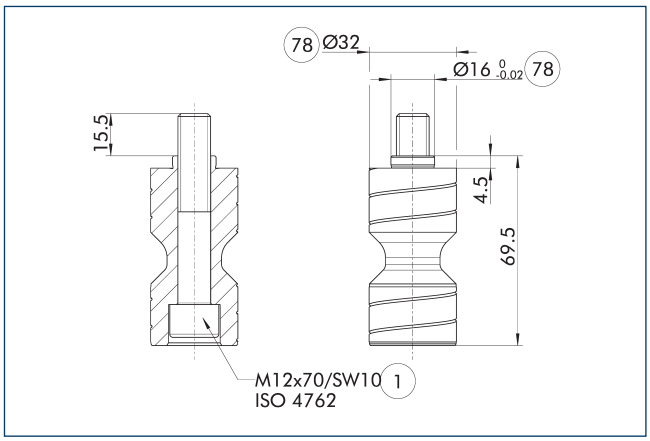

(1) Gripper connection

(78) Fit for centering

BSWS-AR is not compatible with the precision versions 788864of the grippers, as the connection fits are of different sizes.

ⓘ Two adapter pins BSWS-AR, incl. screws, are included in the scope of delivery.

Jaw quick-change system BSWS-BR 240

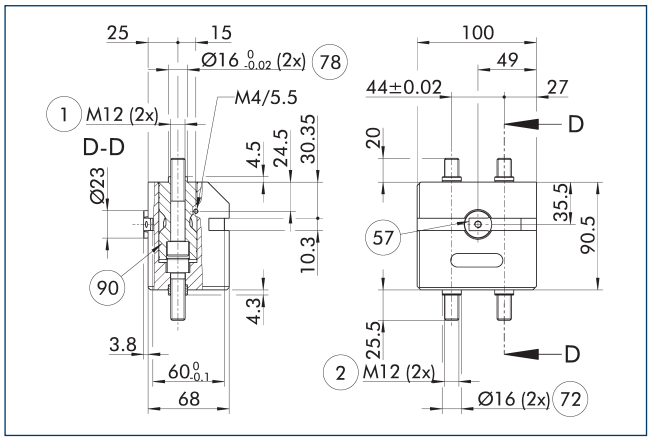

(1) Gripper connection

(2) Finger connection

(57) Locking

(72) Fit for centering sleeves

(78) Fit for centering

(90) Adapter pins BSWS-AR (to be ordered optionally)

The drawing shows the automatic jaw quick-change system BSWS-R.

ⓘ The adapter pins BSWS-AR shown are not included in the scope of delivery for the BSWS-BR and must be ordered separately.

Design of deposit station

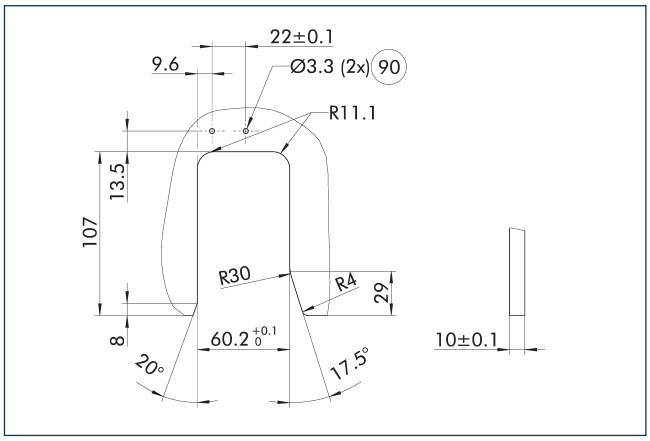

(90) Bores for inductive monitoring

The drawing shows the manufacturing dimensions of the contour for depositing the basic jaw quick-change system BSWS-BR.

BSWS-R-PGZN-plus 240

Automatic jaw quick-change system

Deposit station BSWS-SR

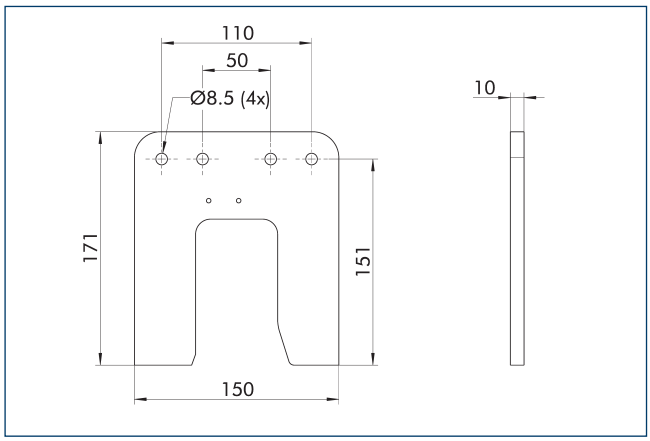

Description	ID	Scope of delivery
Storage system		
BSWS-SR 240	1555978	1

Attachment kit for proximity switch IN 80

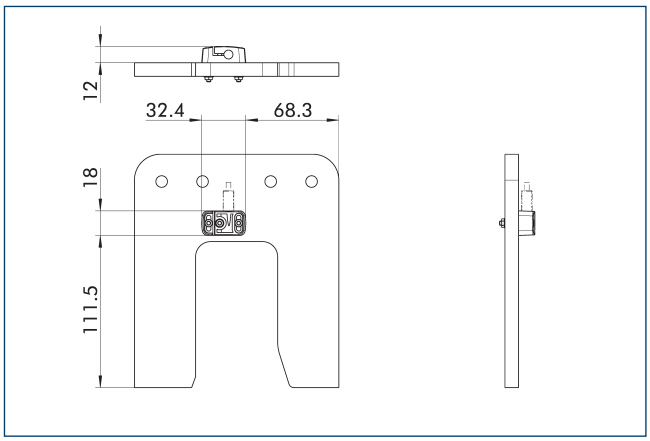

End position monitoring can be mounted with an attachment kit.

Description	ID	
Attachment kit for proximity switch		
AS-IN80-BSWS-SR 240/300	1561481	

ⓘ This attachment kit needs to be ordered optionally as an accessory.

IN 80 inductive proximity switches

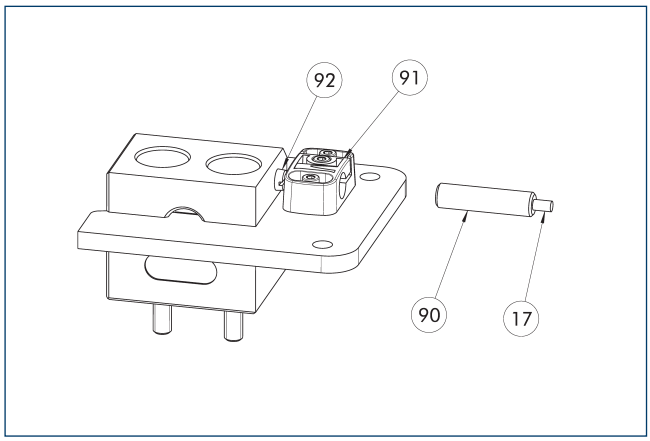

(17) Cable outlet
(90) Sensor IN ...
(91) Sensor bracket
(92) Sensor screw

End position monitoring can be mounted with an attachment kit.

Description	ID	
Attachment kit for proximity switch		
AS-IN80-BSWS-SR 240/300	1561481	
Inductive proximity switch		
IN 80-S-M12	0301578	
IN 80-S-M8	0301478	
INK 80-S	0301550	

ⓘ One sensor (closer/S) is required per deposit station, optionally a cable extension. This attachment kit needs to be ordered optionally as an accessory. Please consider the minimum permissible bending radii for sensor cables. These are generally 35 mm.

BSWS-R-PGZN-plus 300

Automatic jaw quick-change system

Load diagram

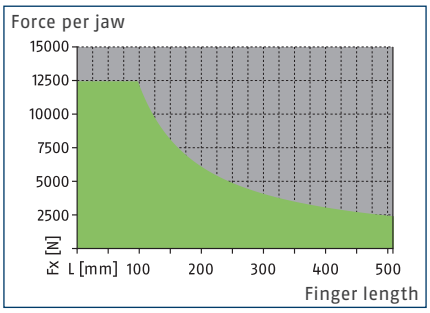

Permitted range

Inadmissible range

Dimensions and maximum loads

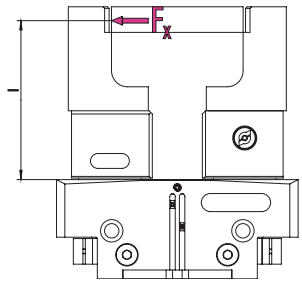

For values see technical data table

ⓘ The indicated torques and forces are static values, apply for each base jaw, and may occur simultaneously.

Technical data

Description		BSWS-BR 300
ID		1555944
Weight	[kg]	1.98
Number per ID		1
Min./max. ambient temperature	[°C]	5/130
Load limits		
Max. permissible loading torque	[Nm]	1220
Max. perm. force Fx	[N]	12430
Adapter pin		
Description		BSWS-AR 300
ID		1453343
Weight	[kg]	1.06
Number per ID		2
Min./max. ambient temperature	[°C]	5/130

Jaw quick-change system BSWS-R

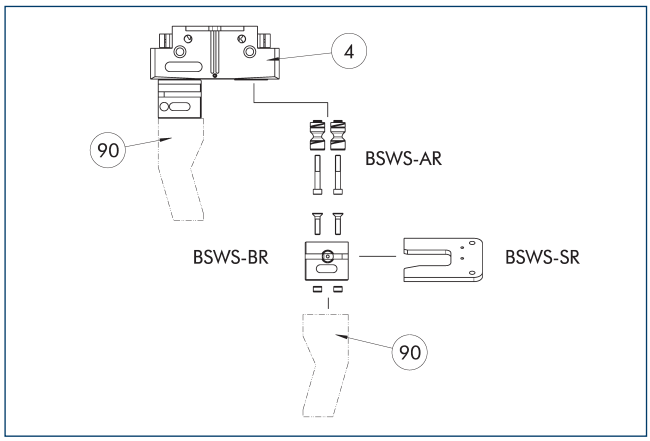

(4) Grippers
(90) Customized gripper fingers

The drawing shows the design and an overview of the components of the jaw quick-change system BSWS-R.

Jaw quick-change system BSWS-BR 300

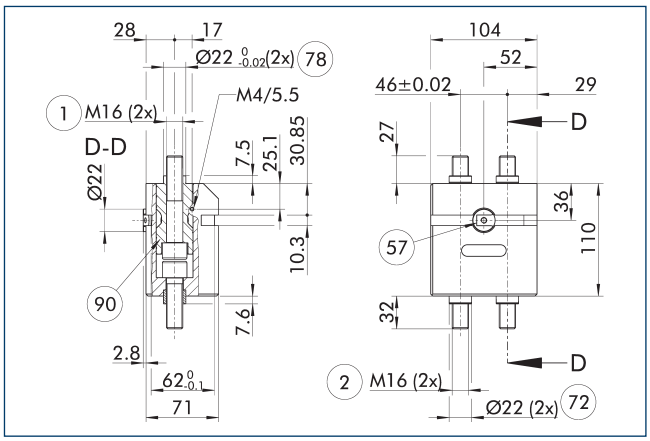

(1) Gripper connection
(2) Finger connection
(57) Locking
(72) Fit for centering sleeves
(78) Fit for centering
(90) Adapter pins BSWS-AR (to be ordered optionally)

The drawing shows the automatic jaw quick-change system BSWS-R.

ⓘ The adapter pins BSWS-AR shown are not included in the scope of delivery for the BSWS-BR and must be ordered separately.

Adapter pin BSWS-AR 300

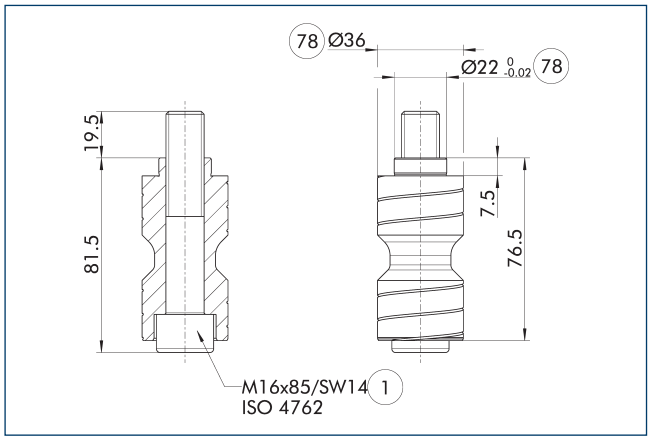

(1) Gripper connection
(78) Fit for centering

BSWS-AR is not compatible with the precision versions 788864of the grippers, as the connection fits are of different sizes.

ⓘ Two adapter pins BSWS-AR, incl. screws, are included in the scope of delivery.

Design of deposit station

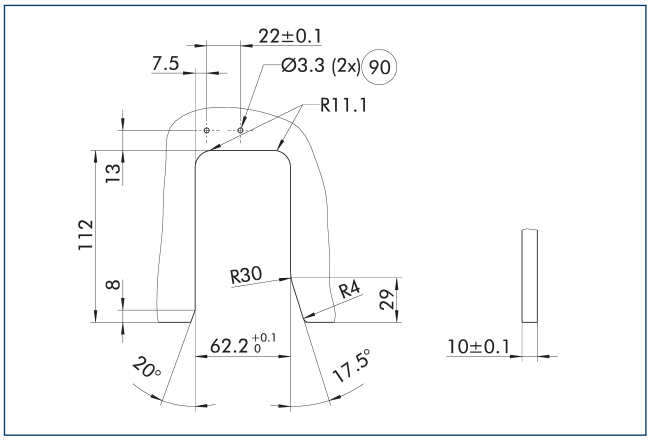

(90) Bores for inductive monitoring

Deposit station BSWS-SR

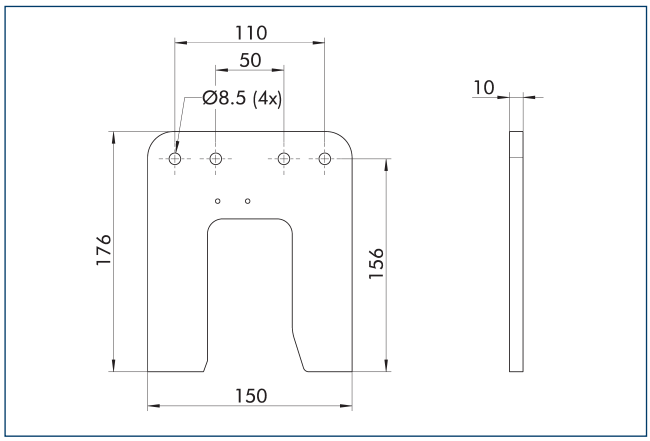

Description	ID	Scope of delivery
Storage system		
BSWS-SR 300	1555982	1

Attachment kit for proximity switch IN 80

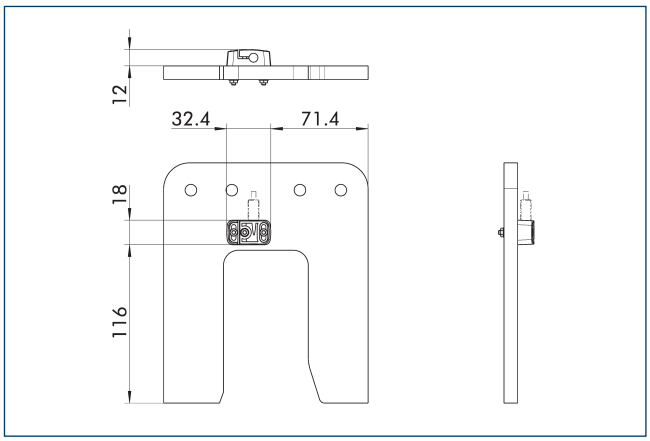

End position monitoring can be mounted with an attachment kit.

Description	ID	
Attachment kit for proximity switch		
AS-IN80-BSWS-SR 240/300	1561481	

ⓘ This attachment kit needs to be ordered optionally as an accessory.

IN 80 inductive proximity switches

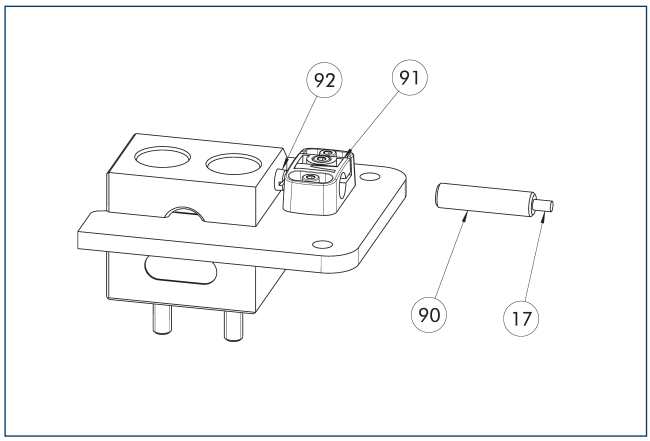

(17) Cable outlet
(90) Sensor IN ...
(91) Sensor bracket
(92) Sensor screw

End position monitoring can be mounted with an attachment kit.

Description	ID	
Attachment kit for proximity switch		
AS-IN80-BSWS-SR 240/300	1561481	
Inductive proximity switch		
IN 80-S-M12	0301578	
IN 80-S-M8	0301478	
INK 80-S	0301550	

ⓘ One sensor (closer/S) is required per deposit station, optionally a cable extension. This attachment kit needs to be ordered optionally as an accessory. Please consider the minimum permissible bending radii for sensor cables. These are generally 35 mm.

SCHUNK SE & Co. KG
Spanntechnik
Greiftechnik
Automatisierungstechnik

Bahnhofstr. 106 - 134
D-74348 Lauffen/Neckar
Tel. +49-7133-103-0
Fax +49-7133-103-2399
info@de.schunk.com
schunk.com

Folgen Sie uns | *Follow us*

2026-02-04 © 2026 SCHUNK SE & Co. KG