Hand in hand for tomorrow

Product data sheet

Rotary feed-through for robots DDF 2

Powerful. Flexible. Energy-efficient.

Rotary feed-through DDF 2

For feeding through electric signals and pneumatics for use on robots even when they are endlessly rotating

Field of application

Robot applications and rotary indexing table with unlimited rotational movement

Advantages – Your benefits

Combined air and electric feed-through for extensive supply to your gripper system/tool

ISO mounting pattern for easy assembly to most types of robots without needing additional adapter plates

Complete series of 12 sizes for best selection of size

Electrical plug for easy change in case of cable break at the robot arm or gripper

Shaft made of steel adapted performance for modern robots

Three versions in one unit Transmission of pneumatic and electrical signals individually or in combination

Newly developed, smooth running and particularly long lasting seals ensure a low starting and continuous torque, so that smaller and more economical drives can be used and that particularly small rotary movements are possible.

Sizes	Max. rotational speed	Pneumatic feed-throughs	Electric feed-through
Quantity: 12	90 .. 120 1/min	2 .. 4	4 .. 10

Functional description

The DDF 2 facilitates rotation of the robot axis by more than 360°, without hoses and cables twisting around the axis. Integrated air feed-throughs and slip ring contacts reliably supply the tool with air and electricity, even at high speeds.
The integrated ISO flange is mounted on the flange of the robot. A ring surrounds the shaft. The ring is connected to a non-rotating part of the robot via a torque support. When the robot flange turns, the shaft turns in the ring. A slip ring which is integrated in the shaft and the housing, thereby transmits electrical signals from the fixed housing into the rotating shaft. Electric signals and up to four pneumatic lines are fed through.

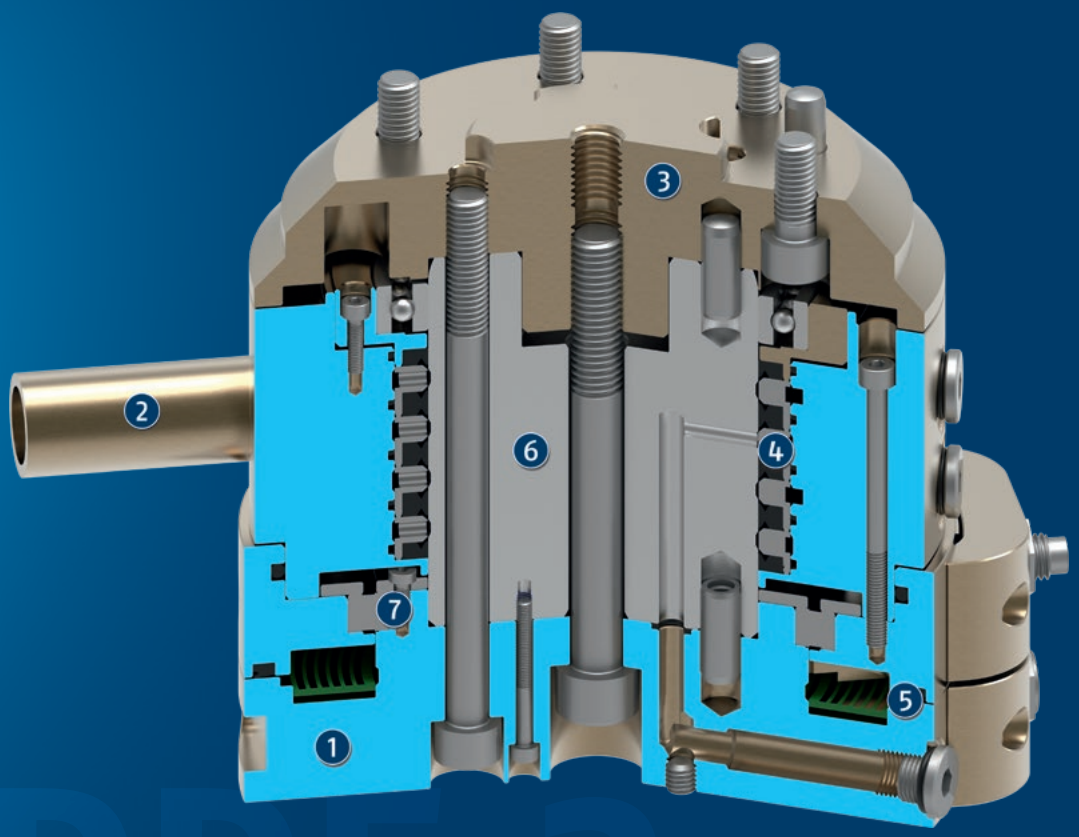

① **Housing**
is weight-optimized due to the use of high-strength aluminum alloy

② **Torque support**
for torque support at the robot

③ **ISO flange**
for easy assembly on the robot flange

④ **Pneumatic feed-through**
for the pneumatics supply of grippers, linear units or other actuators

⑤ **Slip ring**
for the feed-through of up to ten electrical signals

⑥ **Steel shaft**
for transmission of the rotary movement

⑦ **Rolling-contact bearing**
for transmission of the rotary motion without play

General notes about the series

Mounting: Standardized ISO 9409 interface (robot-side)

Housing: high-strength, hard-coated aluminum alloy

Scope of delivery: Rotary feed-through in the ordered variant, elements for mechanical connection and safety information. Product-specific instructions can be downloaded at schunk.com/downloads-manuals.

Warranty: 24 months

Harsh environmental conditions: Please note that use under harsh environmental conditions (e.g. in the coolant area, cast and grinding dust) can considerably reduce the service life of the units, and we will not take over any warranty. However, in many cases we can find a solution. Please contact us for assistance.

Handling weight: is the weight of the total load attached to the flange. When designing, the permissible forces and moments have to be paid attention to. Please note that exceeding the recommended handling weight will shorten the lifespan.

Application example

Insertion tool for assembly of small to medium-sized axes. Due to the rotary feed-through, the axes can be rotated several times infinitely (> 360°) during the assembly process. Slip ring contacts integrated in the rotary feed-through reliably supply the gripper with power.

1. Rotary feed-through DDF 2
2. Automatic tool changers CPS
3. 3-finger centric gripper PZN-plus

SCHUNK offers more ...

The following components make the product even more productive – the suitable addition for the highest functionality, flexibility, reliability, and controlled production.

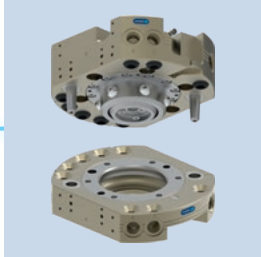

Tool changer

Universal gripper

Universal gripper

Angular gripper

Compensation unit

ⓘ For more information on these products can be found on the following product pages or at schunk.com.

Options and special information

Version with pneumatic and electrical feed-throughs: 2 to 4 pneumatic feed throughs for up to 10 bar and 4 to 10 electrical feed-throughs for 1 A/60 V signals
Version with pneumatic feed-throughs: 2 to 4 pneumatic feed-throughs for up to 10 bar
Version with electrical feed-throughs: 4 to 10 electrical feed-throughs for 1 A/60 V signals
Suitable for compressed air applications: Please contact us for further information.
Version for feed-through vacuum: available on request. Please ask for details.

DDF 2 031

Rotary feed-through for robots

Dimensions and maximum loads

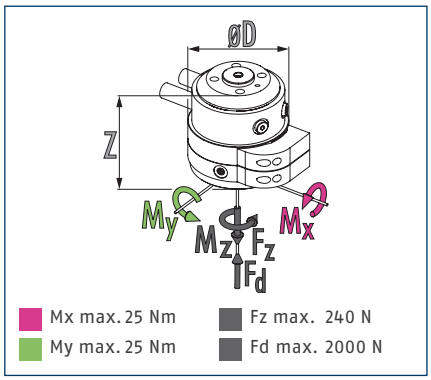

ⓘ Static forces and moments which may act on the rotary feed-through

Technical data

Description		DDF 2-031-P2-E4	DDF 2-031-P2
ID		0323034	0323035
Recommended handling weight	[kg]	6	6
Max. drive speed	[1/min]	120	120
Max. speed of rotation	[°/s]	720	720
Nominal torque	[Nm]	0.8	0.8
Starting torque	[Nm]	1.3	1.3
Angle of rotation	[°]	>360	>360
No. of fluid feed-throughs		2	2
Air connection thread pneumatic feed-through		2x M5	2x M5
Max. pressure per connection	[bar]	10	10
Rate of flow at 6 bar (per channel)	[l/min]	100	100
Max. air pressure air purge	[bar]	1	1
Number of electrical feed-throughs		4	
Max. voltage	[V]	60	
Max. current strength	[A]	1	
Weight	[kg]	0.5	0.45
Robot-side connection		ISO 9409-1-31.5-4-M5	ISO 9409-1-31.5-4-M5
Min./max. ambient temperature	[°C]	5/60	5/60
Max. dynamic bending moment Mx*	[Nm]	12	12
Max. dynamic bending moment My*	[Nm]	12	12
Max. dynamic torsional moment Mz*	[Nm]	8	8
Max. shear force Fq*	[N]	60	60
Dimensions Ø D x Z	[mm]	63 x 56	58 x 50

* *This is the max. total of all payloads (acceleration forces and torques, process forces, emergency stops, etc.), which can affect a rotary feed-through, in order to ensure error-free function.

A version for vacuum feed-through is available on request. Please ask for details.

Main view DDF 2 with electric and pneumatic feed-through

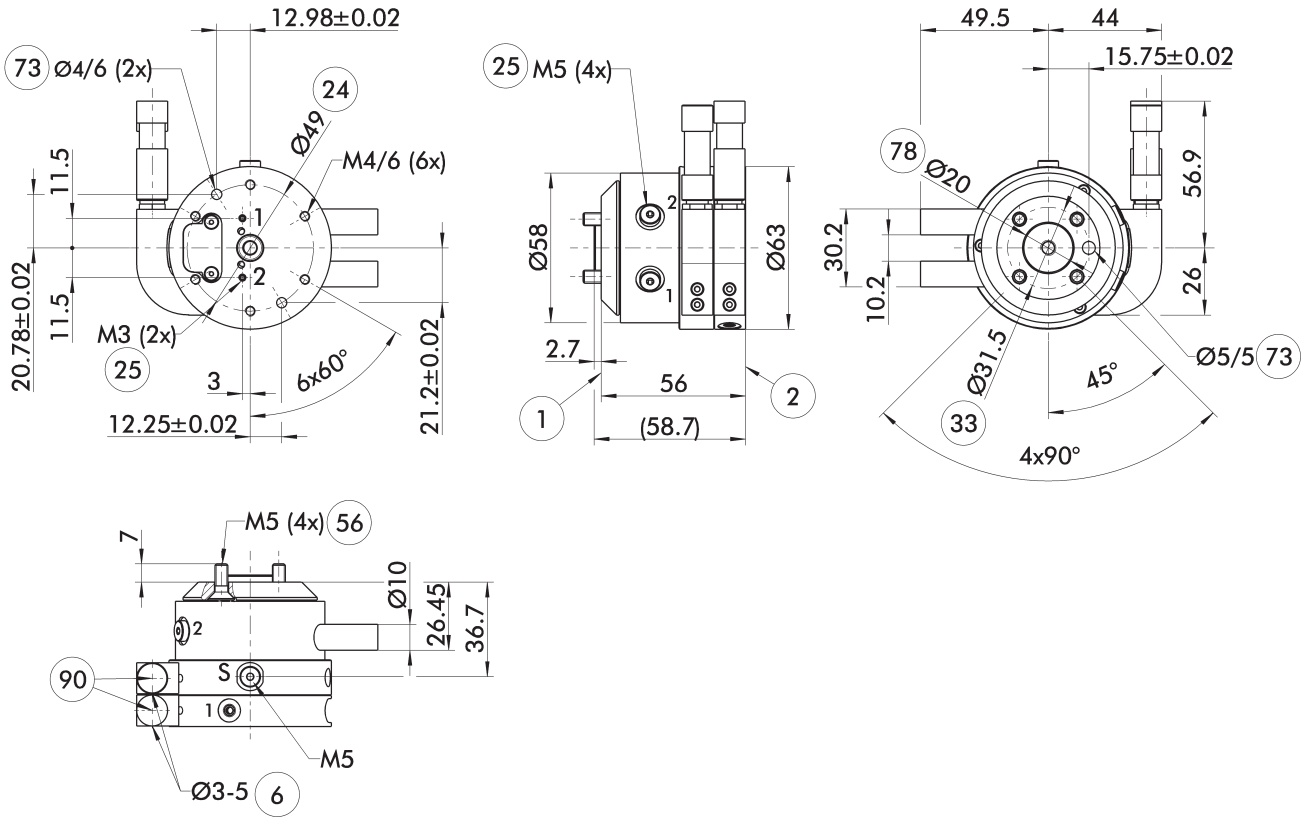

The main view shows the DDF 2 without consideration of following options, but with air and electrical feed-throughs including electrical connectors for the robot- and tool-sides. These are included in the scope of delivery.

- S Air purge connection
- (1) Robot-side connection
- (2) Tool-side connection
- (6) Cable diameter to be used
- (24) Bolt circle
- (25) Pneumatic feed-throughs
- (33) DIN ISO-9409 bolt circle
- (56) Included in the scope of delivery
- (73) Fit for centering pins
- (78) Fit for centering
- (90) Cable connectors/sockets included in the accessory pack

DDF 2 031

Rotary feed-through for robots

Version DDF 2 with pure pneumatic feed-through

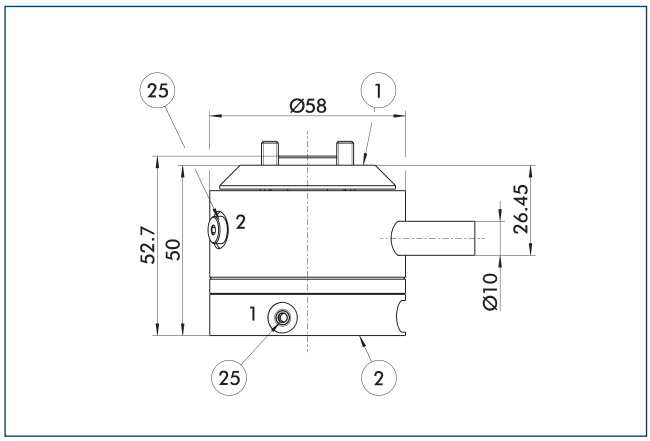

(1) Robot-side connection
(2) Tool-side connection
(25) Pneumatic feed-throughs

Change in dimension for the version with "purely pneumatic feed-through"

Mounting instruction

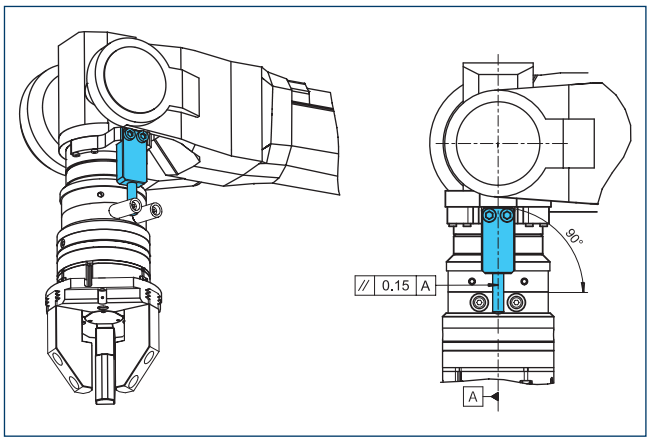

Design note for customer provided torque support

Adapter plates DDF 2-031-T

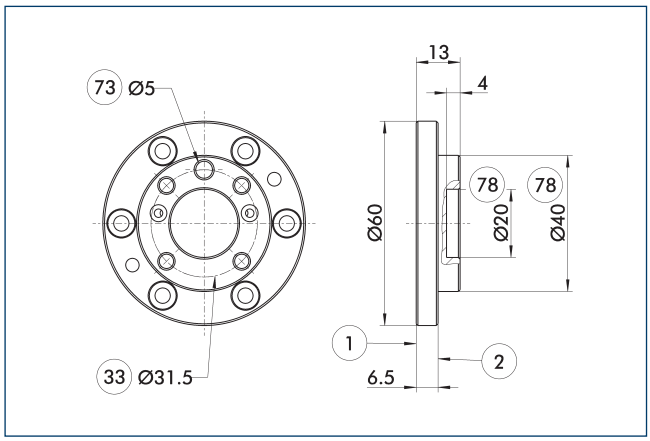

(1) Robot-side connection
(2) Tool-side connection
(33) DIN ISO-9409 bolt circle
(73) Fit for centering pins
(78) Fit for centering

Tool-side adapter plate with ISO 9409 screw connection pattern.

Description	ID	Height
		[mm]
Tool side		
A-DDF 2-031-T	0323220	13

DDF 2 040

Rotary feed-through for robots

Dimensions and maximum loads

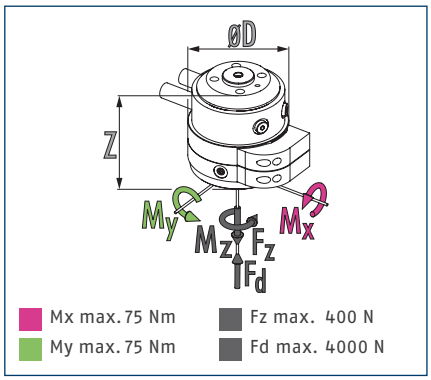

ⓘ Static forces and moments which may act on the rotary feed-through

Technical data

Description		DDF 2-040-P2-E4	DDF 2-040-P2
ID		0323046	0323038
Recommended handling weight	[kg]	10	10
Max. drive speed	[1/min]	120	120
Max. speed of rotation	[°/s]	720	720
Nominal torque	[Nm]	1.5	1.5
Starting torque	[Nm]	2	2
Angle of rotation	[°]	>360	>360
No. of fluid feed-throughs		2	2
Air connection thread pneumatic feed-through		2x M5	2x M5
Max. pressure per connection	[bar]	10	10
Rate of flow at 6 bar (per channel)	[l/min]	200	200
Max. air pressure air purge	[bar]	1	1
Number of electrical feed-throughs		4	
Max. voltage	[V]	60	
Max. current strength	[A]	1	
Weight	[kg]	0.9	0.75
Robot-side connection		ISO 9409-1-40-4-M6	ISO 9409-1-40-4-M6
Min./max. ambient temperature	[°C]	5/60	5/60
Max. dynamic bending moment Mx*	[Nm]	25	25
Max. dynamic bending moment My*	[Nm]	25	25
Max. dynamic torsional moment Mz*	[Nm]	20	20
Max. shear force Fq*	[N]	100	100
Dimensions Ø D x Z	[mm]	78 x 62	73 x 55

* *This is the max. total of all payloads (acceleration forces and torques, process forces, emergency stops, etc.), which can affect a rotary feed-through, in order to ensure error-free function.

A version for vacuum feed-through is available on request. Please ask for details.

Main view DDF 2 with electric and pneumatic feed-through

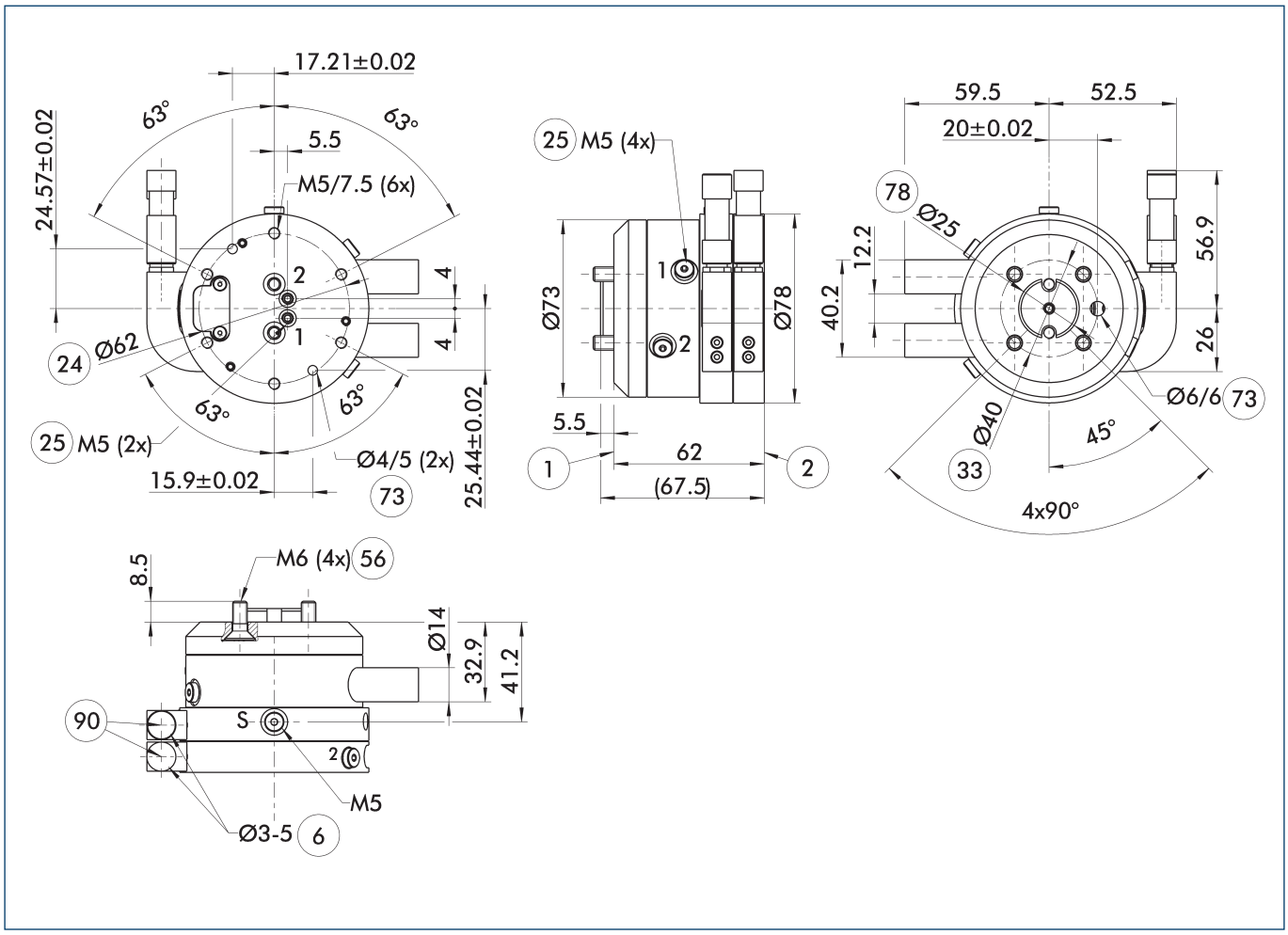

The main view shows the DDF 2 without consideration of following options, but with air and electrical feed-throughs including electrical connectors for the robot- and tool-sides. These are included in the scope of delivery.

- S Air purge connection
- (1) Robot-side connection
- (2) Tool-side connection
- (6) Cable diameter to be used
- (24) Bolt circle
- (25) Pneumatic feed-throughs
- (33) DIN ISO-9409 bolt circle
- (56) Included in the scope of delivery
- (73) Fit for centering pins
- (78) Fit for centering
- (90) Cable connectors/sockets included in the accessory pack

DDF 2 040

Rotary feed-through for robots

Version DDF 2 with pure pneumatic feed-through

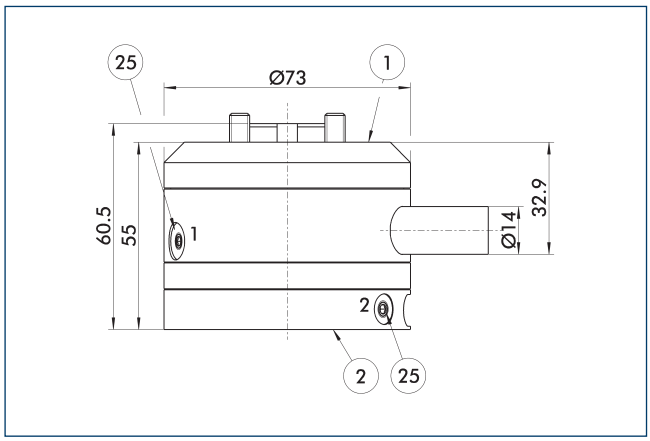

(1) Robot-side connection
(2) Tool-side connection
(25) Pneumatic feed-throughs

Change in dimension for the version with "purely pneumatic feed-through"

Mounting instruction

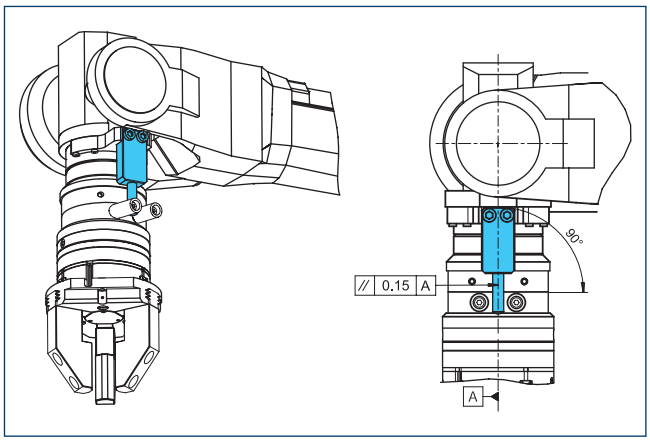

Design note for customer provided torque support

Adapter plates DDF 2-040-1-T

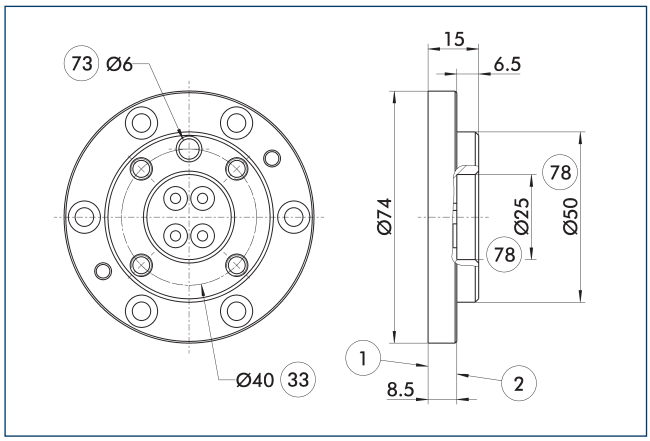

(1) Robot-side connection
(2) Tool-side connection
(33) DIN ISO-9409 bolt circle
(73) Fit for centering pins
(78) Fit for centering

Tool-side adapter plate with ISO 9409 screw connection pattern.

Description	ID	Height
		[mm]
Tool side		
A-DDF 2-040-T	0323221	15

DDF 2 040-1

Rotary feed-through for robots

Dimensions and maximum loads

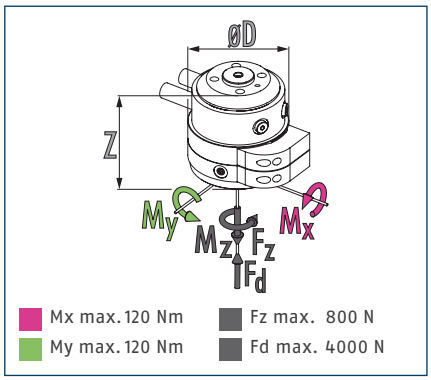

ⓘ Static forces and moments which may act on the rotary feed-through

Technical data

Description		DDF 2-040-1-P4-E6
ID		0323048
Recommended handling weight	[kg]	20
Max. drive speed	[1/min]	110
Max. speed of rotation	[°/s]	660
Nominal torque	[Nm]	3
Starting torque	[Nm]	4.5
Angle of rotation	[°]	>360
No. of fluid feed-throughs		4
Air connection thread pneumatic feed-through		4x M5
Max. pressure per connection	[bar]	10
Rate of flow at 6 bar (per channel)	[l/min]	110
Max. air pressure air purge	[bar]	1
Number of electrical feed-throughs		6
Max. voltage	[V]	60
Max. current strength	[A]	1
Weight	[kg]	2
Robot-side connection		ISO 9409-1-40-4-M6
Min./max. ambient temperature	[°C]	5/60
Max. dynamic bending moment Mx*	[Nm]	55
Max. dynamic bending moment My*	[Nm]	55
Max. dynamic torsional moment Mz*	[Nm]	45
Max. shear force Fq*	[N]	200
Dimensions Ø D x Z	[mm]	95 x 98

* *This is the max. total of all payloads (acceleration forces and torques, process forces, emergency stops, etc.), which can affect a rotary feed-through, in order to ensure error-free function.

A version for vacuum feed-through is available on request. Please ask for details.

Main view DDF 2 with electric and pneumatic feed-through

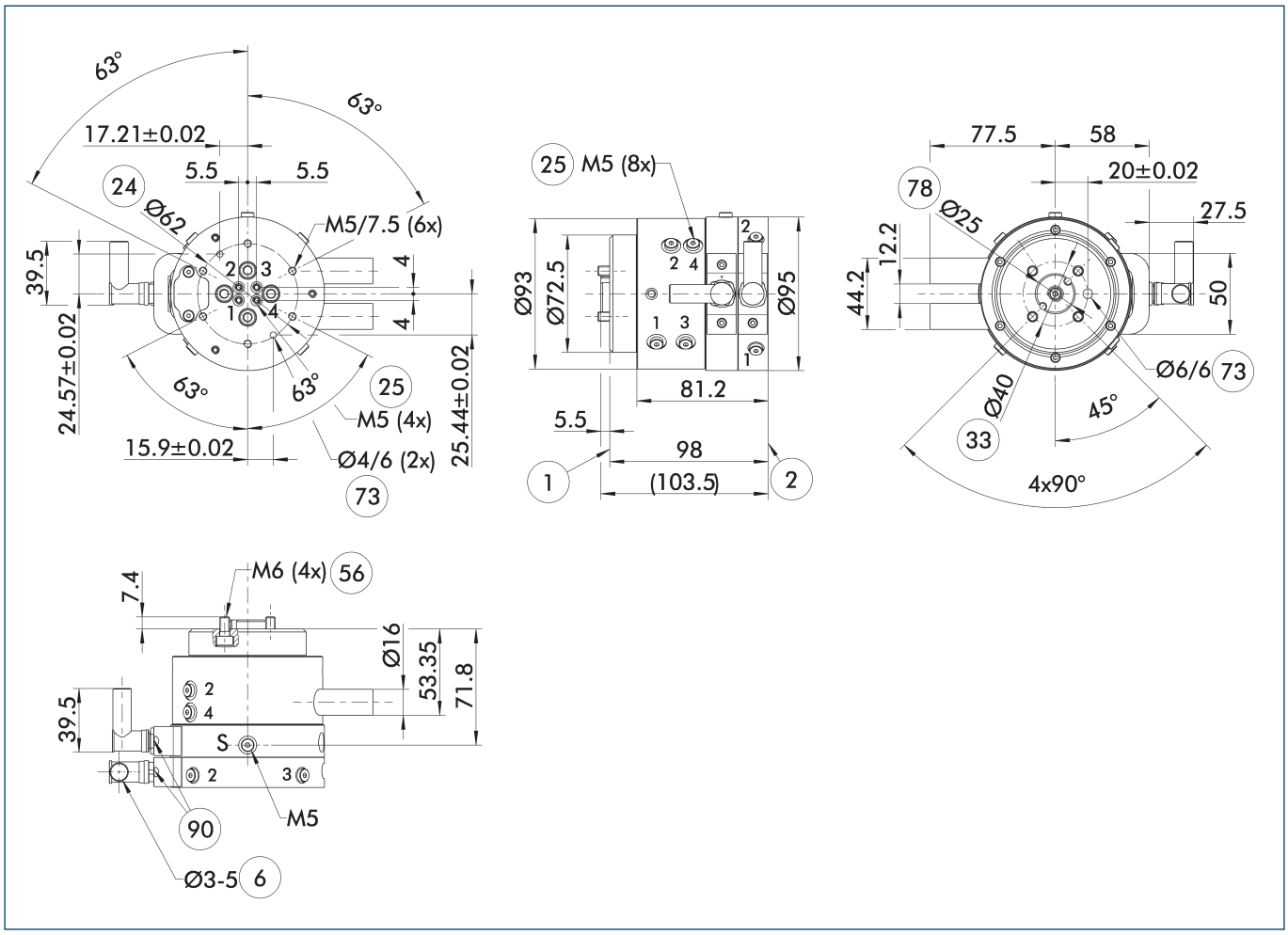

The main view shows the DDF 2 without consideration of following options, but with air and electrical feed-throughs including electrical connectors for the robot- and tool-sides. These are included in the scope of delivery.

- S Air purge connection
- (1) Robot-side connection
- (2) Tool-side connection
- (6) Cable diameter to be used
- (24) Bolt circle
- (25) Pneumatic feed-throughs
- (33) DIN ISO-9409 bolt circle
- (56) Included in the scope of delivery
- (73) Fit for centering pins
- (78) Fit for centering
- (90) Cable connectors/sockets included in the accessory pack

Mounting instruction

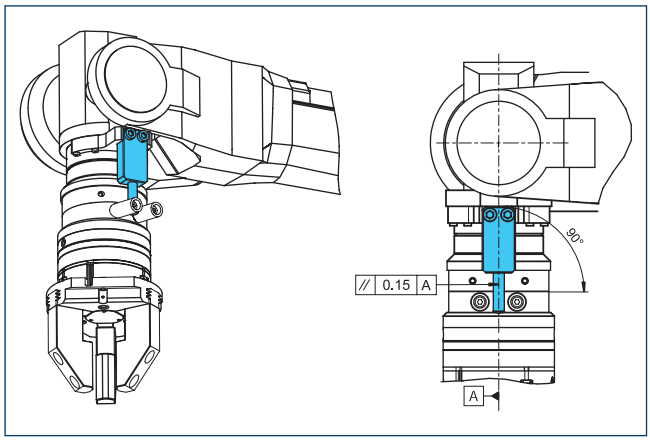

Design note for customer provided torque support

Adapter plates DDF 2-040-1-T

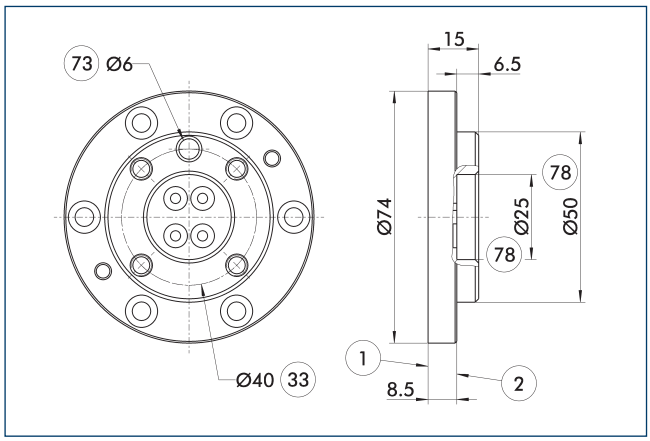

1 Robot-side connection
2 Tool-side connection
33 DIN ISO-9409 bolt circle
73 Fit for centering pins
78 Fit for centering

Tool-side adapter plate with ISO 9409 screw connection pattern.

Description	ID	Height
		[mm]
Tool side		
A-DDF 2-040-T	0323221	15

Connection cables

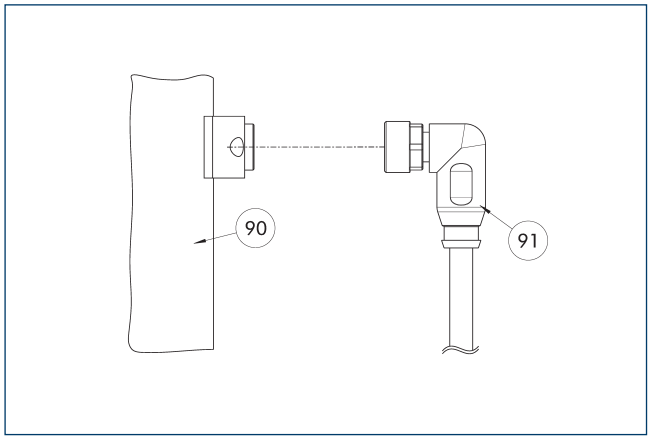

90 Electrical connection component
91 Cable with angled connector

Description	ID	Length
		[m]
Connection cable – suitable for drag chains and a high torsion resistance		
KA BW9-L7P-0200	0323001	2
KA BW9-L7P-0500	0323003	5
KA SW9-L7P-0200	0323002	2
KA SW9-L7P-0500	0323004	5

ⓘ The connection cables are suitable for use in a cable track and for robot applications.KA BW = robot side, KA SW = tool side

DDF 2 050

Rotary feed-through for robots

Dimensions and maximum loads

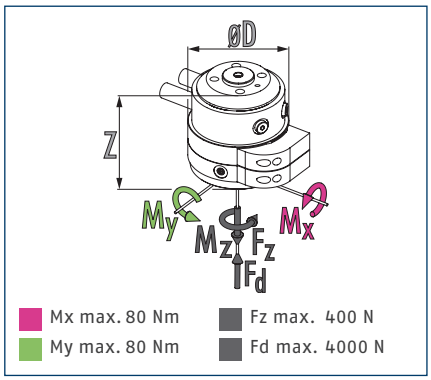

ⓘ Static forces and moments which may act on the rotary feed-through

Technical data

Description		DDF 2-050-P2-E4	DDF 2-050-P2
ID		0323056	0323059
Recommended handling weight	[kg]	10	10
Max. drive speed	[1/min]	120	120
Max. speed of rotation	[°/s]	720	720
Nominal torque	[Nm]	1.5	1.5
Starting torque	[Nm]	2	2
Angle of rotation	[°]	>360	>360
No. of fluid feed-throughs		2	2
Air connection thread pneumatic feed-through		2x M5	2x M5
Max. pressure per connection	[bar]	10	10
Rate of flow at 6 bar (per channel)	[l/min]	200	200
Max. air pressure air purge	[bar]	1	1
Number of electrical feed-throughs		4	
Max. voltage	[V]	60	
Max. current strength	[A]	1	
Weight	[kg]	0.95	0.75
Robot-side connection		ISO 9409-1-50-4-M6	ISO 9409-1-50-4-M6
Min./max. ambient temperature	[°C]	5/60	5/60
Max. dynamic bending moment Mx*	[Nm]	25	25
Max. dynamic bending moment My*	[Nm]	25	25
Max. dynamic torsional moment Mz*	[Nm]	20	20
Max. shear force Fq*	[N]	100	100
Dimensions Ø D x Z	[mm]	78 x 32	73 x 55

* *This is the max. total of all payloads (acceleration forces and torques, process forces, emergency stops, etc.), which can affect a rotary feed-through, in order to ensure error-free function.

A version for vacuum feed-through is available on request. Please ask for details.

Main view DDF 2 with electric and pneumatic feed-through

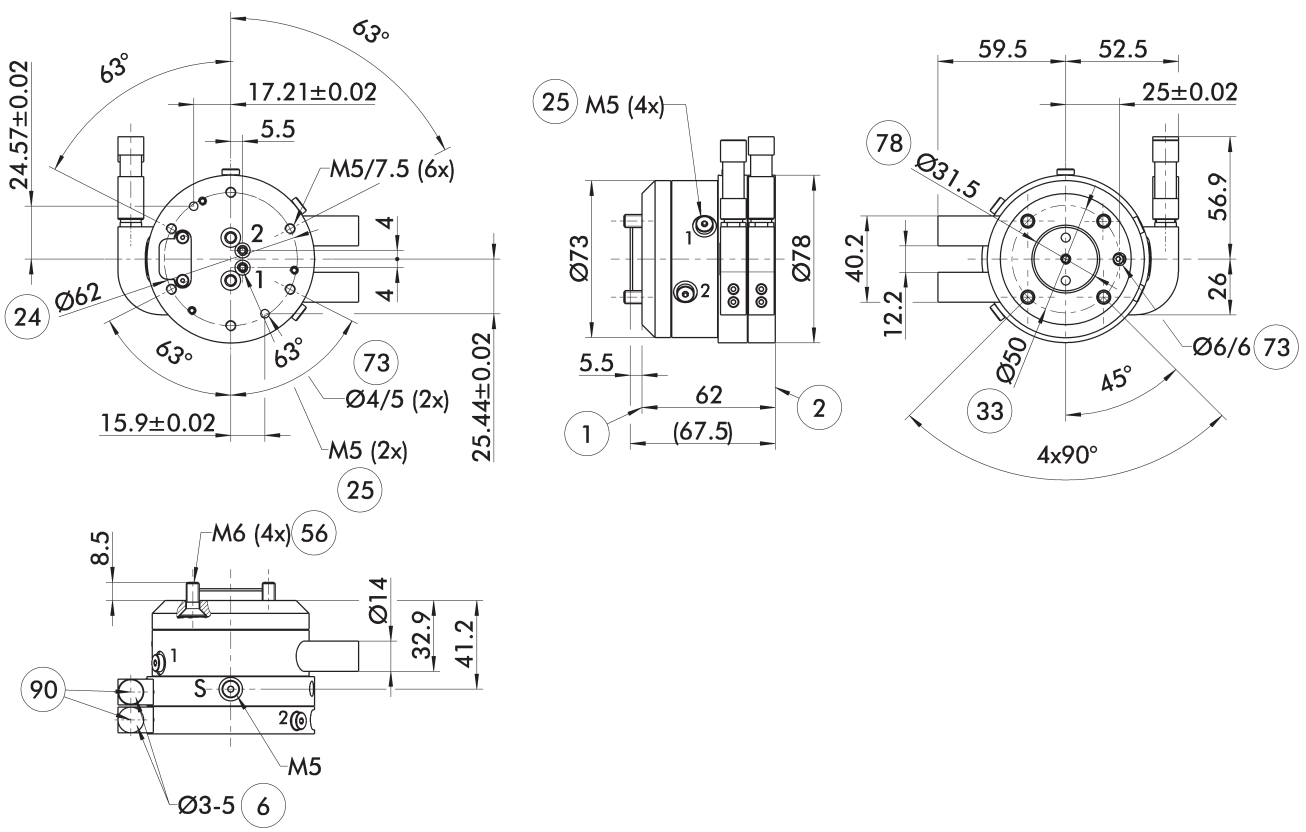

The main view shows the DDF 2 without consideration of following options, but with air and electrical feed-throughs including electrical connectors for the robot- and tool-sides. These are included in the scope of delivery.

- S Air purge connection
- (1) Robot-side connection
- (2) Tool-side connection
- (6) Cable diameter to be used
- (24) Bolt circle
- (25) Pneumatic feed-throughs
- (33) DIN ISO-9409 bolt circle
- (56) Included in the scope of delivery
- (73) Fit for centering pins
- (78) Fit for centering
- (90) Cable connectors/sockets included in the accessory pack

DDF 2 050

Rotary feed-through for robots

Version DDF 2 with pure pneumatic feed-through

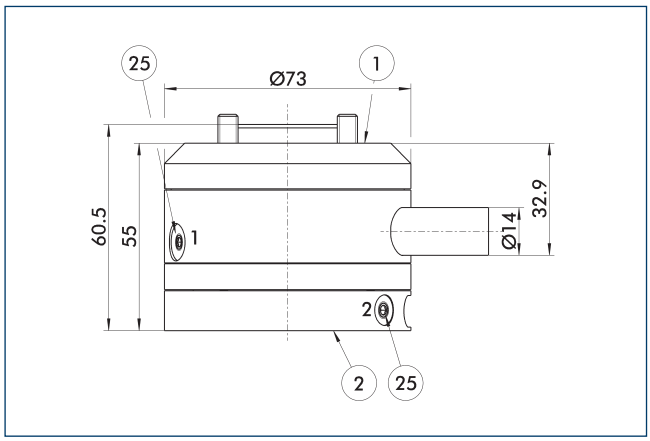

(1) Robot-side connection
(2) Tool-side connection
(25) Pneumatic feed-throughs

Change in dimension for the version with "purely pneumatic feed-through"

Mounting instruction

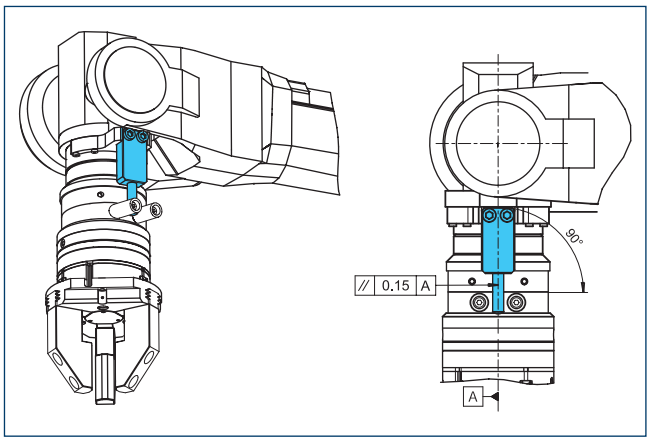

Design note for customer provided torque support

Adapter Plate DDF 2-050-1-T

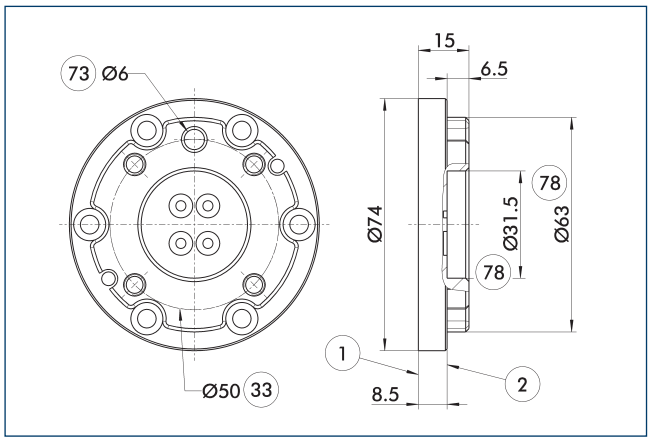

(1) Robot-side connection
(2) Tool-side connection
(33) DIN ISO-9409 bolt circle
(73) Fit for centering pins
(78) Fit for centering

Tool-side adapter plate with ISO 9409 screw connection pattern.

Description	ID	Height
		[mm]
Tool side		
A-DDF 2-050-T	0323222	15

DDF 2 050-1

Rotary feed-through for robots

Dimensions and maximum loads

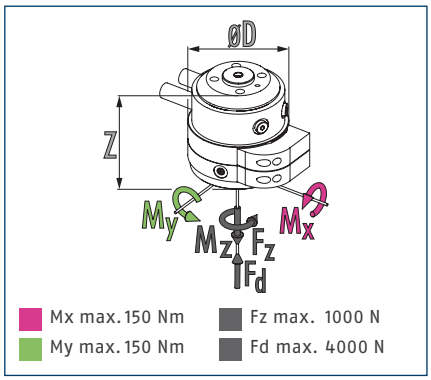

ⓘ Static forces and moments which may act on the rotary feed-through

Technical data

Description		DDF 2-050-1-P4-E6
ID		0323058
Recommended handling weight	[kg]	25
Max. drive speed	[1/min]	110
Max. speed of rotation	[°/s]	660
Nominal torque	[Nm]	3
Starting torque	[Nm]	4.5
Angle of rotation	[°]	>360
No. of fluid feed-throughs		4
Air connection thread pneumatic feed-through		4x M5
Max. pressure per connection	[bar]	10
Rate of flow at 6 bar (per channel)	[l/min]	110
Max. air pressure air purge	[bar]	1
Number of electrical feed-throughs		6
Max. voltage	[V]	60
Max. current strength	[A]	1
Weight	[kg]	2.1
Robot-side connection		ISO 9409-1-50-4-M6
Min./max. ambient temperature	[°C]	5/60
Max. dynamic bending moment Mx*	[Nm]	60
Max. dynamic bending moment My*	[Nm]	60
Max. dynamic torsional moment Mz*	[Nm]	50
Max. shear force Fq*	[N]	250
Dimensions Ø D x Z	[mm]	95 x 98

* *This is the max. total of all payloads (acceleration forces and torques, process forces, emergency stops, etc.), which can affect a rotary feed-through, in order to ensure error-free function.

A version for vacuum feed-through is available on request. Please ask for details.

Main view DDF 2 with electric and pneumatic feed-through

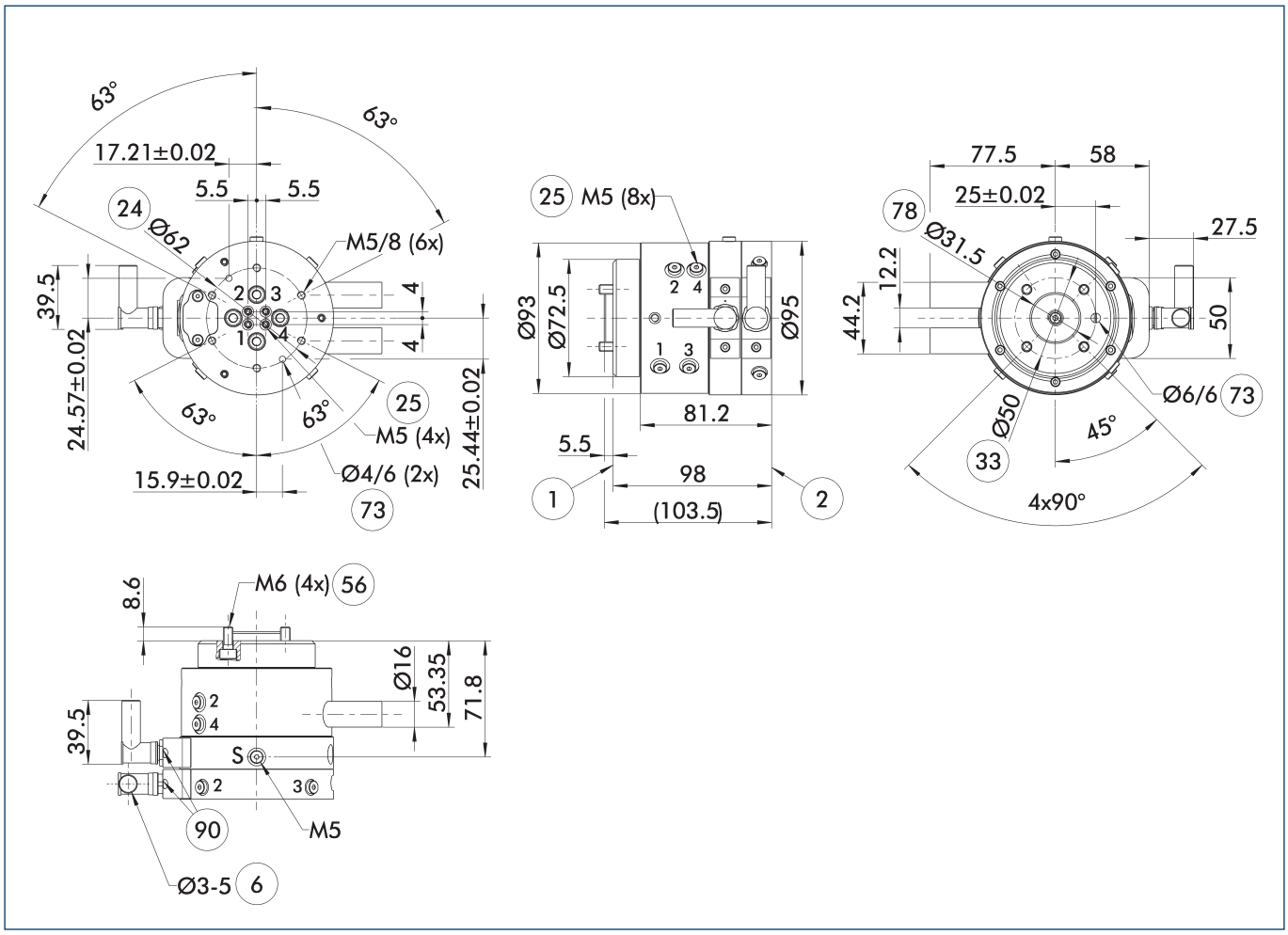

The main view shows the DDF 2 without consideration of following options, but with air and electrical feed-throughs including electrical connectors for the robot- and tool-sides. These are included in the scope of delivery.

- S Air purge connection
- (1) Robot-side connection
- (2) Tool-side connection
- (6) Cable diameter to be used
- (24) Bolt circle
- (25) Pneumatic feed-throughs
- (33) DIN ISO-9409 bolt circle
- (56) Included in the scope of delivery
- (73) Fit for centering pins
- (78) Fit for centering
- (90) Cable connectors/sockets included in the accessory pack

Mounting instruction

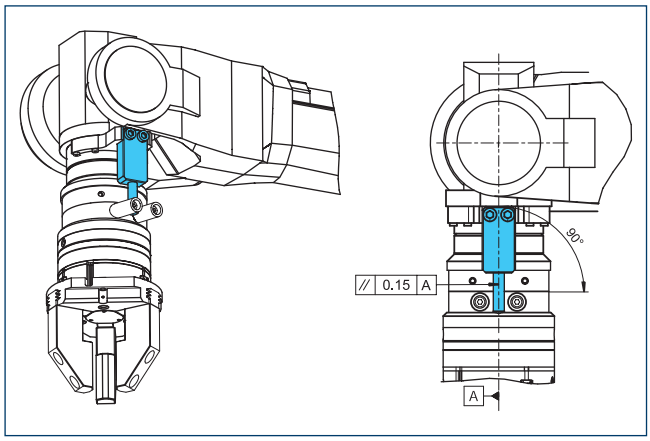

Design note for customer provided torque support

Adapter Plate DDF 2-050-1-T

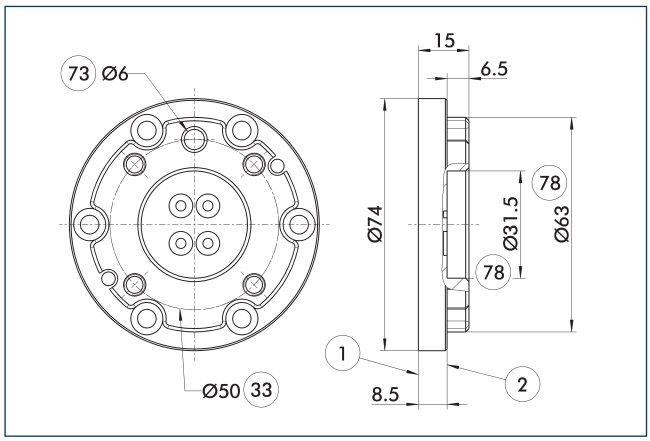

1 Robot-side connection
2 Tool-side connection
33 DIN ISO-9409 bolt circle
73 Fit for centering pins
78 Fit for centering

Tool-side adapter plate with ISO 9409 screw connection pattern.

Description	ID	Height
		[mm]
Tool side		
A-DDF 2-050-T	0323222	15

Connection cables

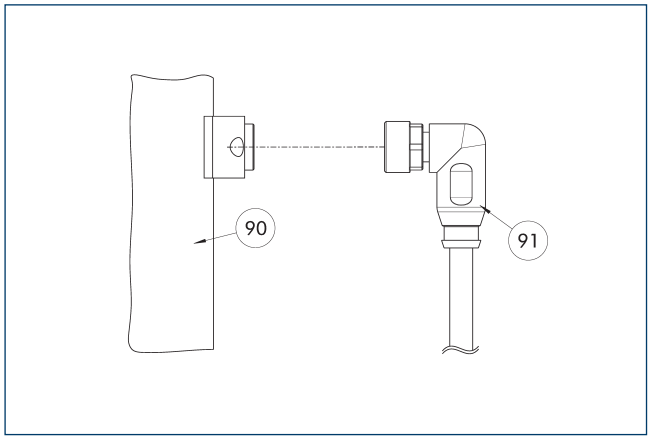

90 Electrical connection component
91 Cable with angled connector

Description	ID	Length
		[m]
Connection cable – suitable for drag chains and a high torsion resistance		
KA BW9-L7P-0200	0323001	2
KA BW9-L7P-0500	0323003	5
KA SW9-L7P-0200	0323002	2
KA SW9-L7P-0500	0323004	5

ⓘ The connection cables are suitable for use in a cable track and for robot applications.KA BW = robot side, KA SW = tool side

DDF 2 063

Rotary feed-through for robots

Dimensions and maximum loads

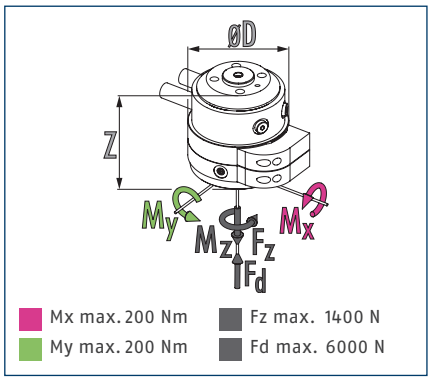

ⓘ Static forces and moments which may act on the rotary feed-through

Technical data

Description		DDF 2-063-P4-E6
ID		0323068
Recommended handling weight	[kg]	35
Max. drive speed	[1/min]	110
Max. speed of rotation	[°/s]	660
Nominal torque	[Nm]	3
Starting torque	[Nm]	4.5
Angle of rotation	[°]	>360
No. of fluid feed-throughs		4
Air connection thread pneumatic feed-through		4x M5
Max. pressure per connection	[bar]	10
Rate of flow at 6 bar (per channel)	[l/min]	110
Max. air pressure air purge	[bar]	1
Number of electrical feed-throughs		6
Max. voltage	[V]	60
Max. current strength	[A]	1
Weight	[kg]	2.2
Robot-side connection		ISO 9409-1-63-4-M6
Min./max. ambient temperature	[°C]	5/60
Max. dynamic bending moment Mx*	[Nm]	85
Max. dynamic bending moment My*	[Nm]	85
Max. dynamic torsional moment Mz*	[Nm]	60
Max. shear force Fq*	[N]	350
Dimensions Ø D x Z	[mm]	95 x 97.5

* *This is the max. total of all payloads (acceleration forces and torques, process forces, emergency stops, etc.), which can affect a rotary feed-through, in order to ensure error-free function.

A version for vacuum feed-through is available on request. Please ask for details.

Main view DDF 2 with electric and pneumatic feed-through

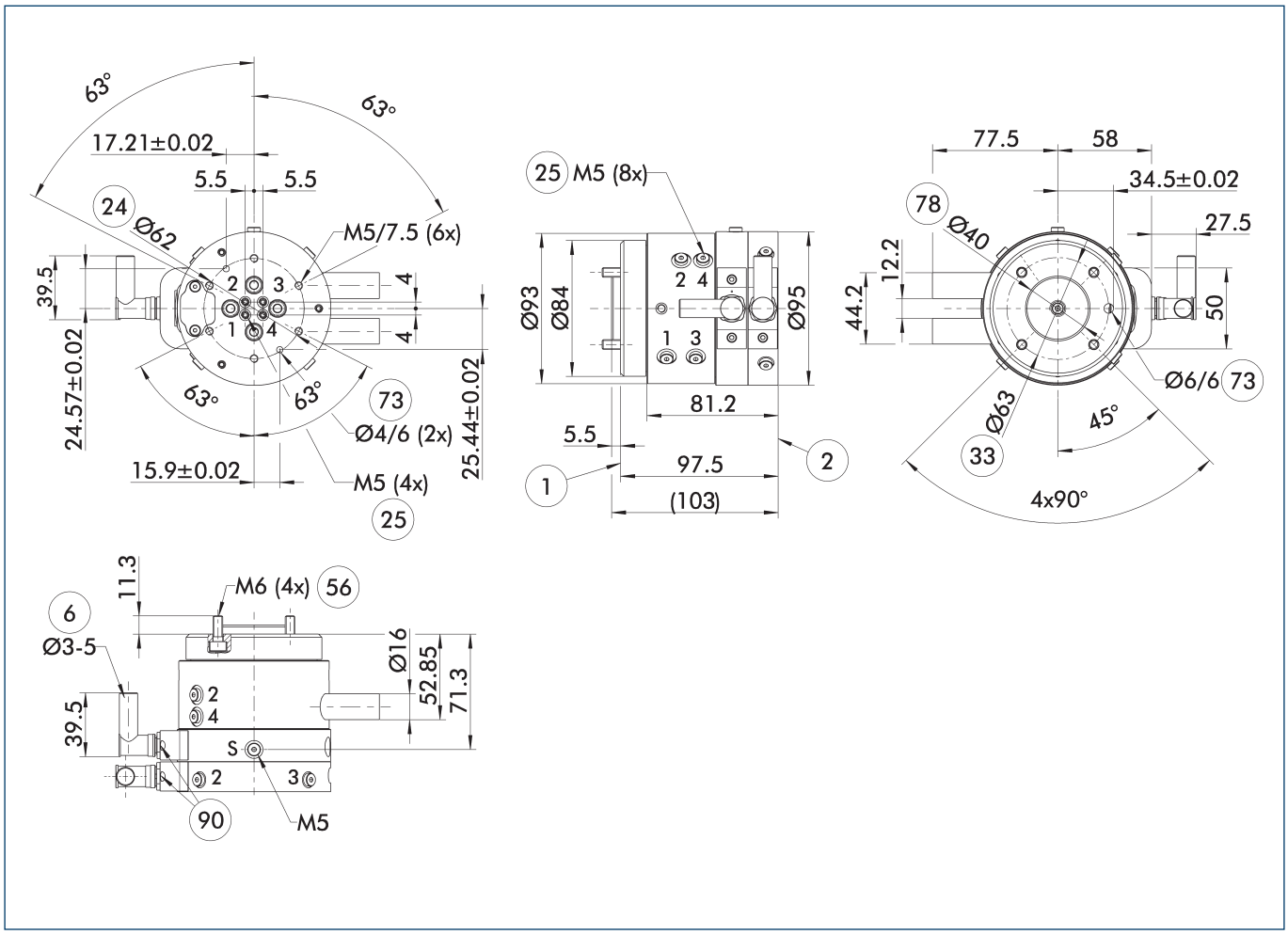

The main view shows the DDF 2 without consideration of following options, but with air and electrical feed-throughs including electrical connectors for the robot- and tool-sides. These are included in the scope of delivery.

- S Air purge connection
- (1) Robot-side connection
- (2) Tool-side connection
- (6) Cable diameter to be used
- (24) Bolt circle
- (25) Pneumatic feed-throughs
- (33) DIN ISO-9409 bolt circle
- (56) Included in the scope of delivery
- (73) Fit for centering pins
- (78) Fit for centering
- (90) Cable connectors/sockets included in the accessory pack

Mounting instruction

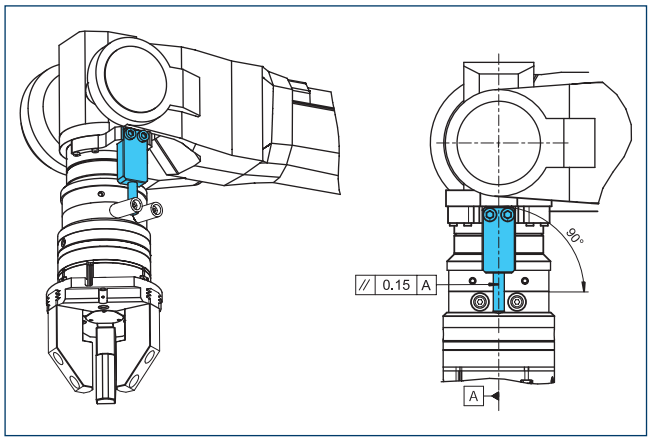

Design note for customer provided torque support

Adapter plates DDF 2-063-T

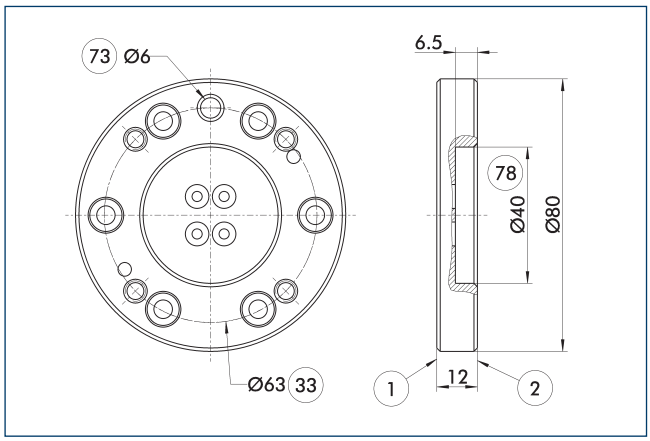

1 Robot-side connection
2 Tool-side connection
33 DIN ISO-9409 bolt circle
73 Fit for centering pins
78 Fit for centering

Tool-side adapter plate with ISO 9409 screw connection pattern.

Description	ID	Height
		[mm]
Tool side		
A-DDF 2-063-T	0323223	12

Connection cables

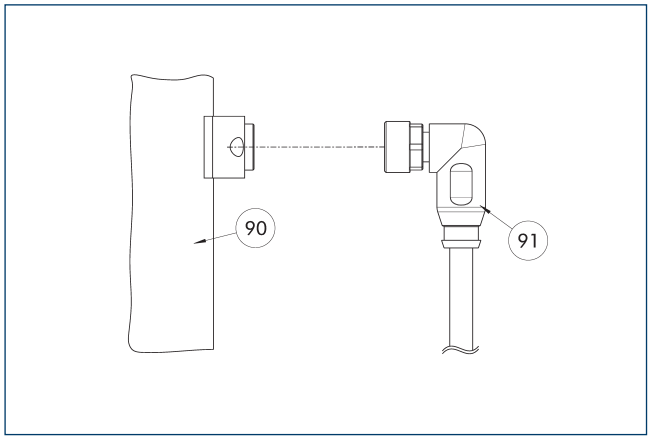

90 Electrical connection component
91 Cable with angled connector

Description	ID	Length
		[m]
Connection cable – suitable for drag chains and a high torsion resistance		
KA BW9-L7P-0200	0323001	2
KA BW9-L7P-0500	0323003	5
KA SW9-L7P-0200	0323002	2
KA SW9-L7P-0500	0323004	5

ⓘ The connection cables are suitable for use in a cable track and for robot applications.KA BW = robot side, KA SW = tool side

DDF 2 080

Rotary feed-through for robots

Dimensions and maximum loads

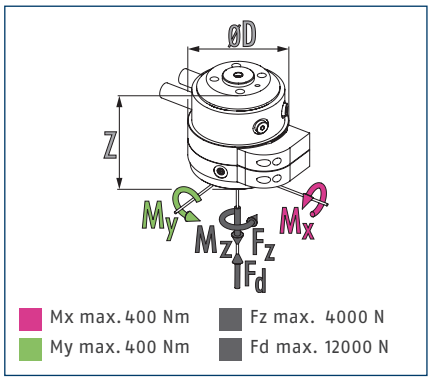

ⓘ Static forces and moments which may act on the rotary feed-through

Technical data

Description		DDF 2-080-P4-E6
ID		0323092
Recommended handling weight	[kg]	100
Max. drive speed	[1/min]	100
Max. speed of rotation	[°/s]	600
Nominal torque	[Nm]	8
Starting torque	[Nm]	10
Angle of rotation	[°]	>360
No. of fluid feed-throughs		4
Air connection thread pneumatic feed-through		4x G1/8"
Max. pressure per connection	[bar]	10
Rate of flow at 6 bar (per channel)	[l/min]	240
Max. air pressure air purge	[bar]	1
Number of electrical feed-throughs		6
Max. voltage	[V]	60
Max. current strength	[A]	1
Weight	[kg]	5.9
Robot-side connection		ISO 9409-1-80-6-M8
Min./max. ambient temperature	[°C]	5/60
Max. dynamic bending moment Mx*	[Nm]	250
Max. dynamic bending moment My*	[Nm]	250
Max. dynamic torsional moment Mz*	[Nm]	180
Max. shear force Fq*	[N]	1000
Dimensions Ø D x Z	[mm]	136 x 128.5

* *This is the max. total of all payloads (acceleration forces and torques, process forces, emergency stops, etc.), which can affect a rotary feed-through, in order to ensure error-free function.

A version for vacuum feed-through is available on request. Please ask for details.

Main view DDF 2 with electric and pneumatic feed-through

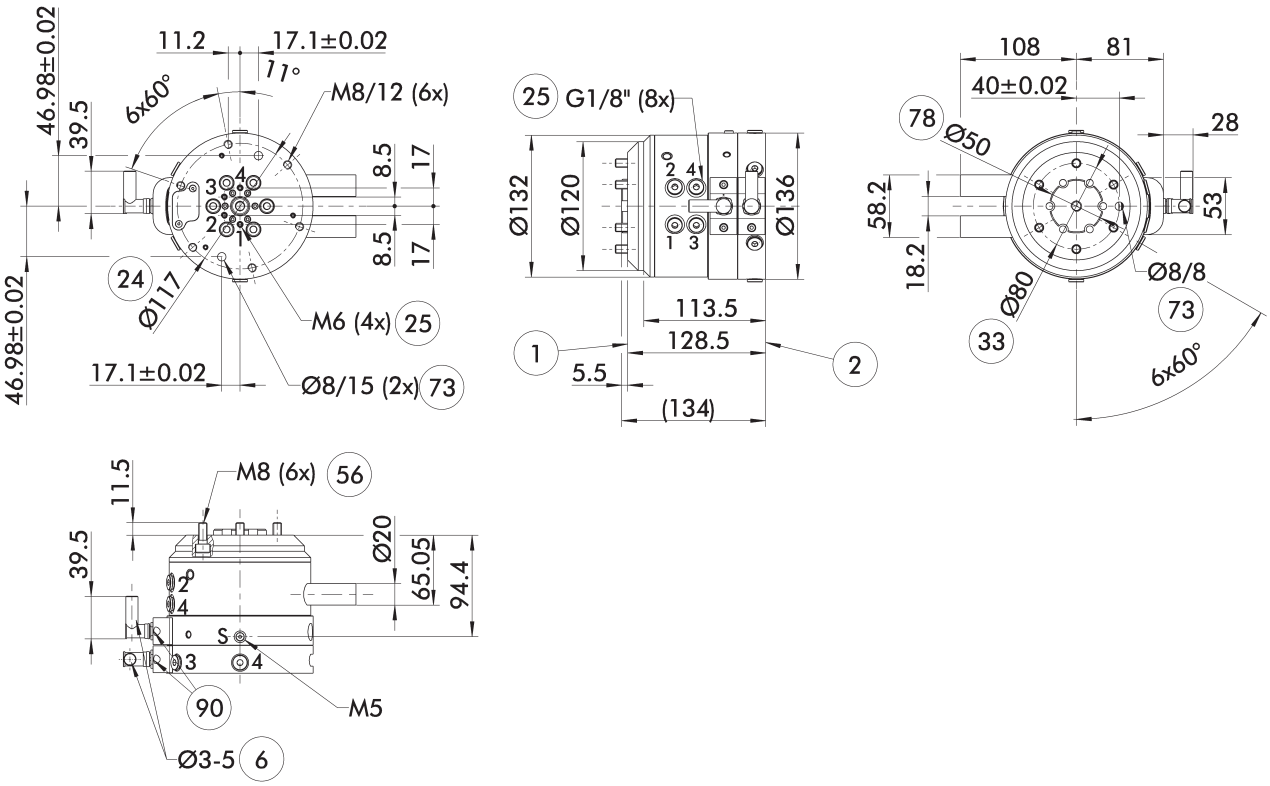

The main view shows the DDF 2 without consideration of following options, but with air and electrical feed-throughs including electrical connectors for the robot- and tool-sides. These are included in the scope of delivery.

- S Air purge connection
- (1) Robot-side connection
- (2) Tool-side connection
- (6) Cable diameter to be used
- (24) Bolt circle
- (25) Pneumatic feed-throughs
- (33) DIN ISO-9409 bolt circle
- (56) Included in the scope of delivery
- (73) Fit for centering pins
- (78) Fit for centering
- (90) Cable connectors/sockets included in the accessory pack

Mounting instruction

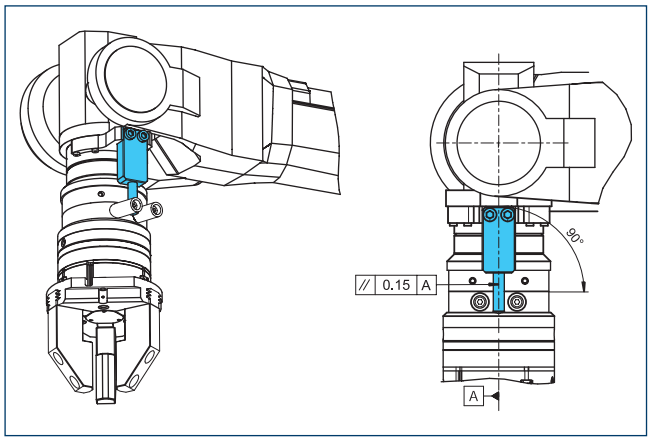

Design note for customer provided torque support

Adapter plate DDF 2-080-1-T

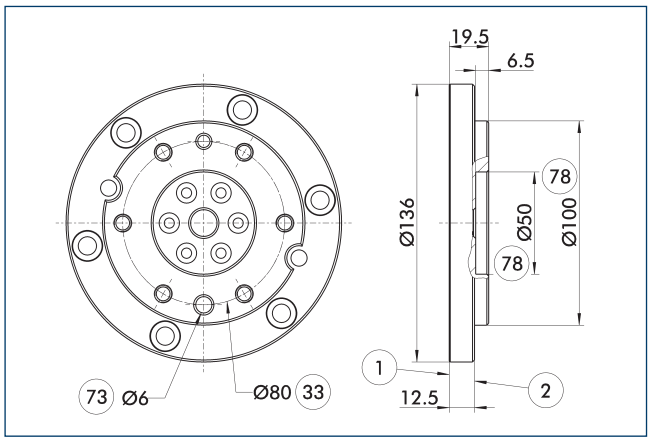

1 Robot-side connection
2 Tool-side connection
33 DIN ISO-9409 bolt circle
73 Fit for centering pins
78 Fit for centering

Tool-side adapter plate with ISO 9409 screw connection pattern.

Description	ID	Height
		[mm]
Tool side		
A-DDF 2-080-T	0323224	19.5

Connection cables

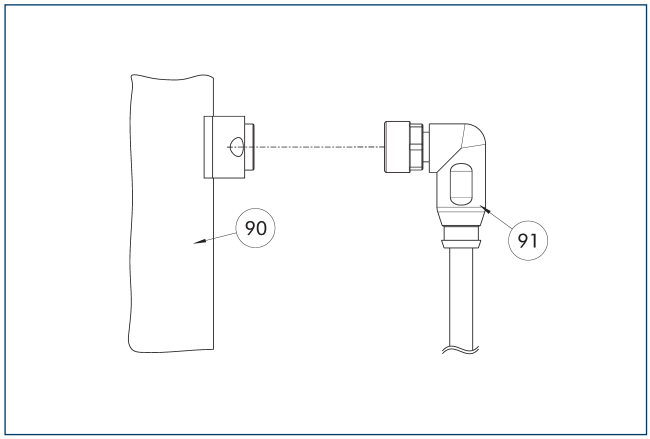

90 Electrical connection component
91 Cable with angled connector

Description	ID	Length
		[m]
Connection cable – suitable for drag chains and a high torsion resistance		
KA BW9-L7P-0200	0323001	2
KA BW9-L7P-0500	0323003	5
KA SW9-L7P-0200	0323002	2
KA SW9-L7P-0500	0323004	5

ⓘ The connection cables are suitable for use in a cable track and for robot applications.KA BW = robot side, KA SW = tool side

DDF 2 080-1

Rotary feed-through for robots

Dimensions and maximum loads

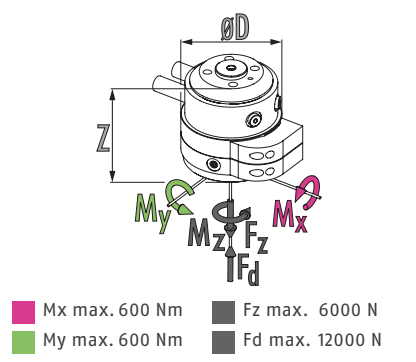

ⓘ Static forces and moments which may act on the rotary feed-through

Technical data

Description		DDF 2-080-1-P4-E10
ID		0323093
Recommended handling weight	[kg]	150
Max. drive speed	[1/min]	90
Max. speed of rotation	[°/s]	540
Nominal torque	[Nm]	22
Starting torque	[Nm]	25
Angle of rotation	[°]	>360
No. of fluid feed-throughs		4
Air connection thread pneumatic feed-through		4x G1/8"
Max. pressure per connection	[bar]	10
Rate of flow at 6 bar (per channel)	[l/min]	370
Max. air pressure air purge	[bar]	1
Number of electrical feed-throughs		10
Max. voltage	[V]	60
Max. current strength	[A]	1
Weight	[kg]	13.1
Robot-side connection		ISO 9409-1-80-6-M8
Min./max. ambient temperature	[°C]	5/60
Max. dynamic bending moment Mx*	[Nm]	400
Max. dynamic bending moment My*	[Nm]	400
Max. dynamic torsional moment Mz*	[Nm]	300
Max. shear force Fq*	[N]	1500
Dimensions Ø D x Z	[mm]	200 x 152.9

* *This is the max. total of all payloads (acceleration forces and torques, process forces, emergency stops, etc.), which can affect a rotary feed-through, in order to ensure error-free function.

A version for vacuum feed-through is available on request. Please ask for details.

Main view DDF 2 with electric and pneumatic feed-through

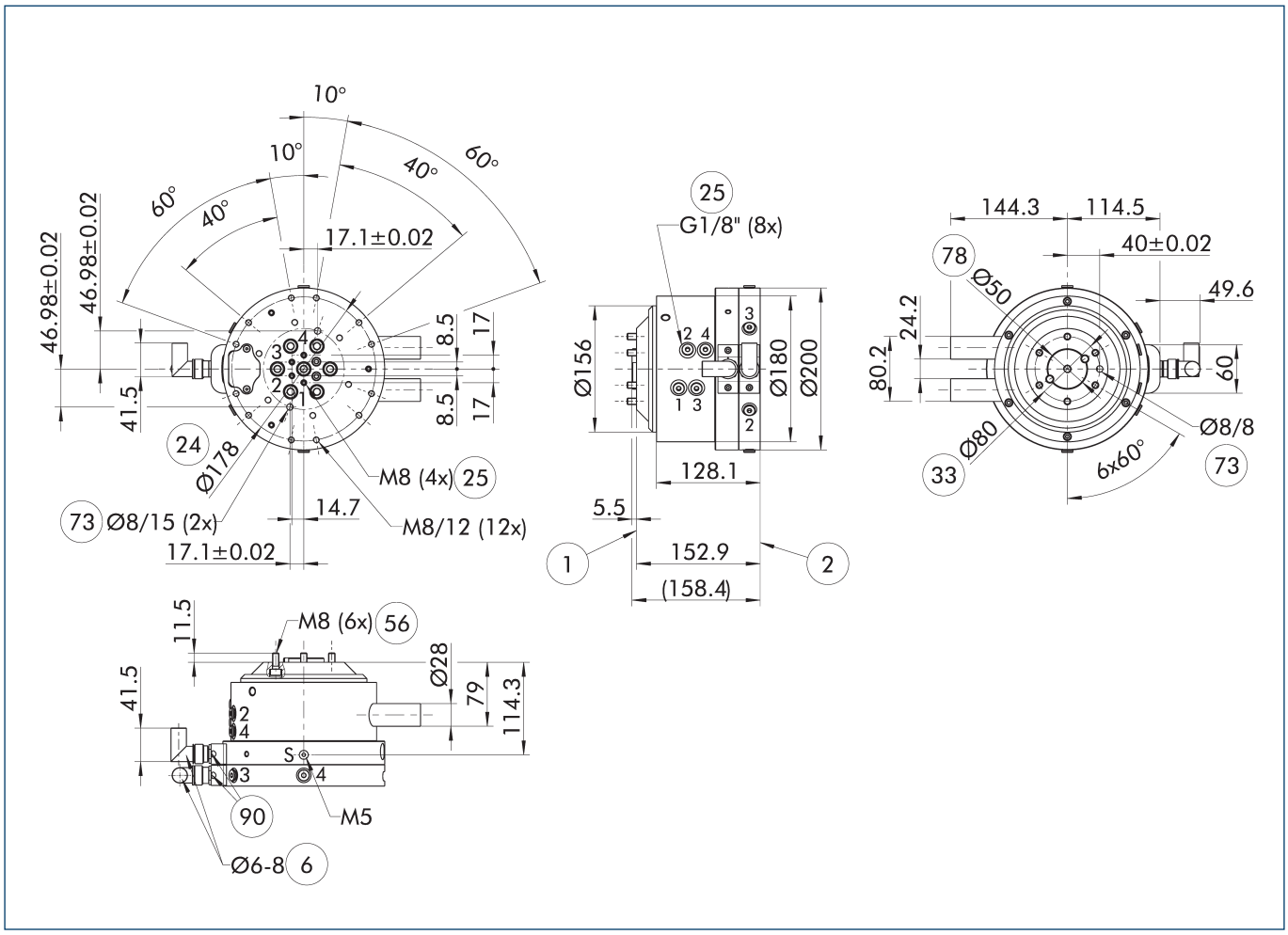

The main view shows the DDF 2 without consideration of following options, but with air and electrical feed-throughs including electrical connectors for the robot- and tool-sides. These are included in the scope of delivery.

- S Air purge connection
- (1) Robot-side connection
- (2) Tool-side connection
- (6) Cable diameter to be used
- (24) Bolt circle
- (25) Pneumatic feed-throughs
- (33) DIN ISO-9409 bolt circle
- (56) Included in the scope of delivery
- (73) Fit for centering pins
- (78) Fit for centering
- (90) Cable connectors/sockets included in the accessory pack

Mounting instruction

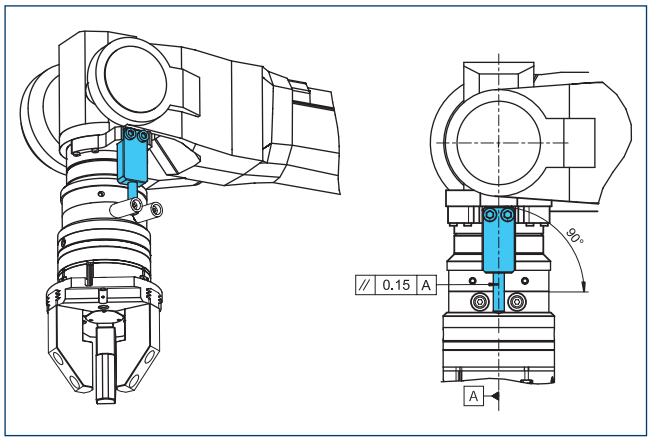

Design note for customer provided torque support

Adapter plate DDF 2-080-1-T

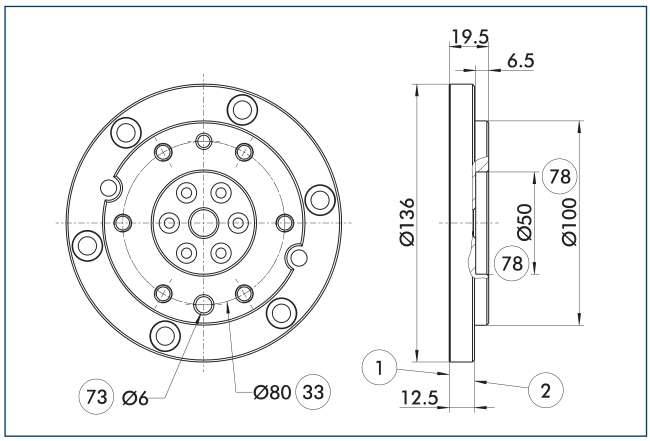

1 Robot-side connection
2 Tool-side connection
33 DIN ISO-9409 bolt circle
73 Fit for centering pins
78 Fit for centering

Tool-side adapter plate with ISO 9409 screw connection pattern.

Description	ID	Height
		[mm]
Tool side		
A-DDF 2-080-T	0323224	19.5

Connection cables

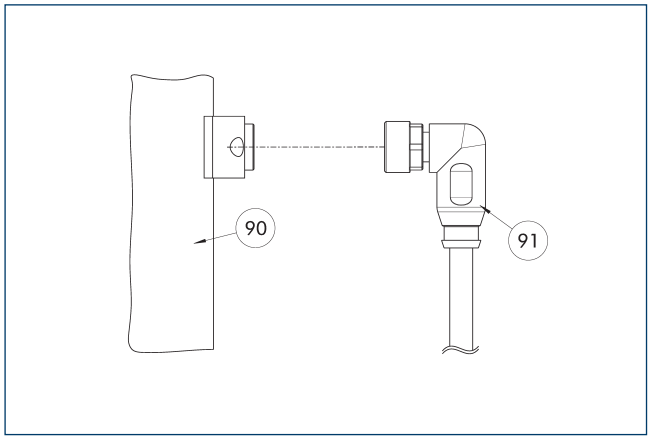

90 Electrical connection component
91 Cable with angled connector

Description	ID	Length
		[m]
Connection cables		
KA BW16-L 12P-0500	0323005	5
KA SW16-L 12P-0500	0323006	5

ⓘ The connection cables are suitable for use in a cable track and for robot applications.KA BW = robot side, KA SW = tool side

DDF 2 100

Rotary feed-through for robots

Dimensions and maximum loads

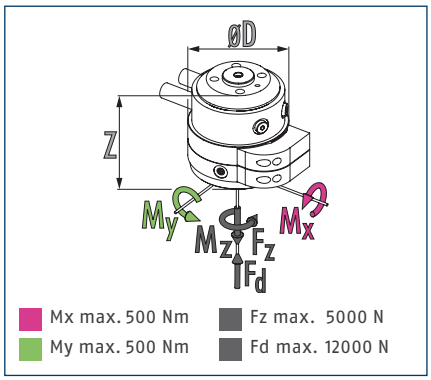

ⓘ Static forces and moments which may act on the rotary feed-through

Technical data

Description		DDF 2-100-P4-E6
ID		0323112
Recommended handling weight	[kg]	125
Max. drive speed	[1/min]	100
Max. speed of rotation	[°/s]	600
Nominal torque	[Nm]	8
Starting torque	[Nm]	10
Angle of rotation	[°]	>360
No. of fluid feed-throughs		4
Air connection thread pneumatic feed-through		4x G1/8"
Max. pressure per connection	[bar]	10
Rate of flow at 6 bar (per channel)	[l/min]	240
Max. air pressure air purge	[bar]	1
Number of electrical feed-throughs		6
Max. voltage	[V]	60
Max. current strength	[A]	1
Weight	[kg]	6.1
Robot-side connection		ISO 9409-1-100-6-M8
Min./max. ambient temperature	[°C]	5/60
Max. dynamic bending moment Mx*	[Nm]	290
Max. dynamic bending moment My*	[Nm]	290
Max. dynamic torsional moment Mz*	[Nm]	200
Max. shear force Fq*	[N]	1250
Dimensions Ø D x Z	[mm]	136 x 128.5

* *This is the max. total of all payloads (acceleration forces and torques, process forces, emergency stops, etc.), which can affect a rotary feed-through, in order to ensure error-free function.

A version for vacuum feed-through is available on request. Please ask for details.

Main view DDF 2 with electric and pneumatic feed-through

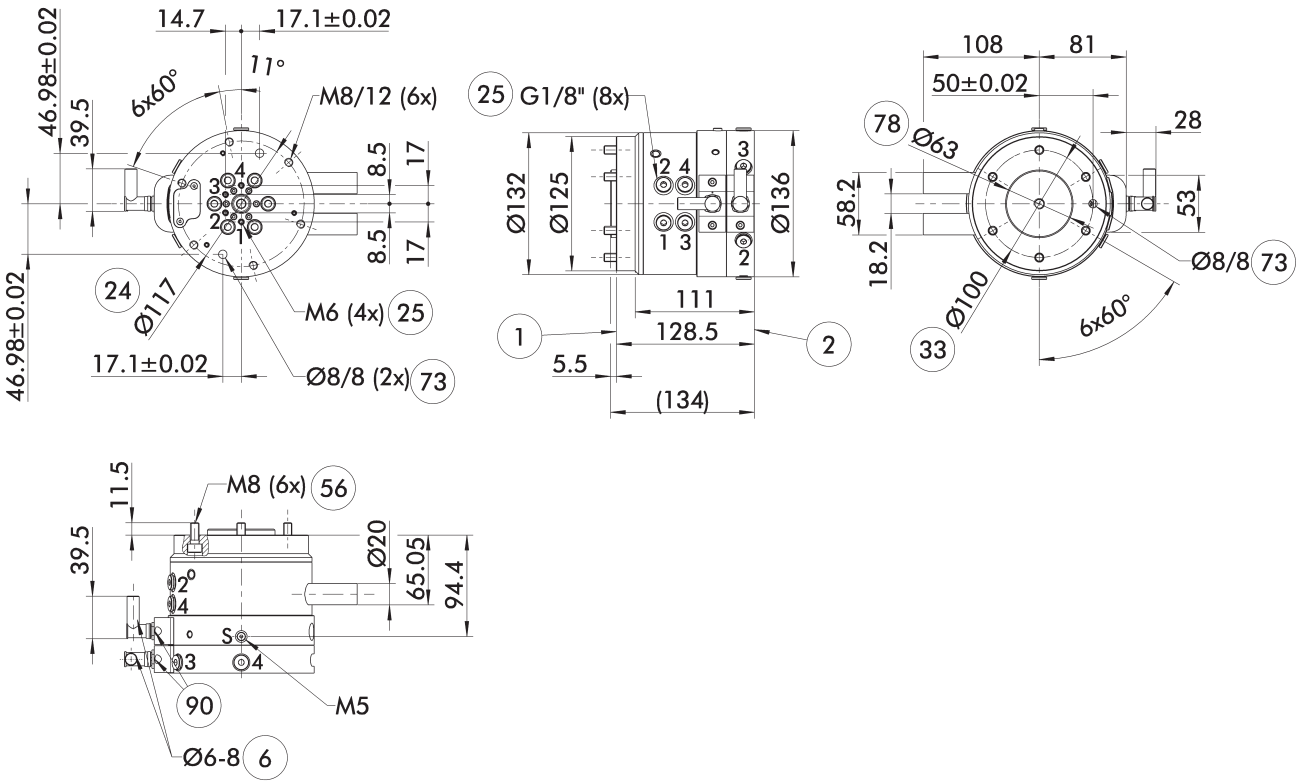

The main view shows the DDF 2 without consideration of following options, but with air and electrical feed-throughs including electrical connectors for the robot- and tool-sides. These are included in the scope of delivery.

- S Air purge connection
- (1) Robot-side connection
- (2) Tool-side connection
- (6) Cable diameter to be used
- (24) Bolt circle
- (25) Pneumatic feed-throughs
- (33) DIN ISO-9409 bolt circle
- (56) Included in the scope of delivery
- (73) Fit for centering pins
- (78) Fit for centering
- (90) Cable connectors/sockets included in the accessory pack

Mounting instruction

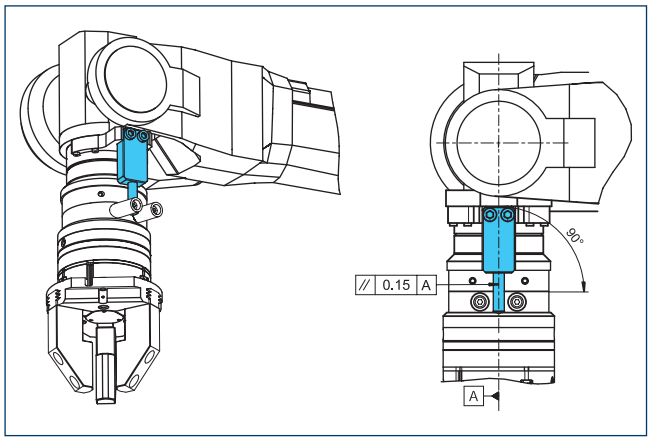

Design note for customer provided torque support

Adapter plate DDF 2-100-1-T

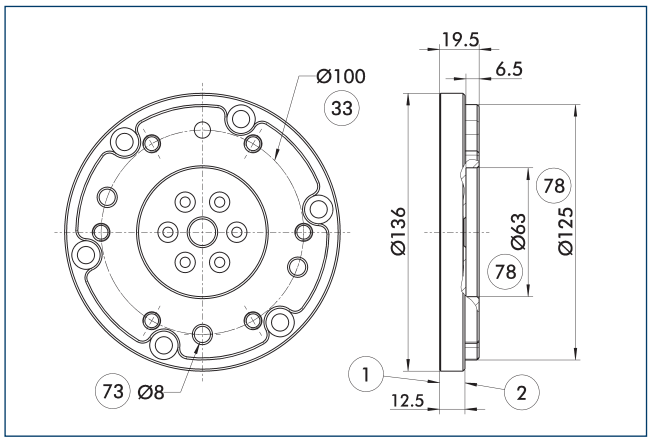

1 Robot-side connection
2 Tool-side connection
33 DIN ISO-9409 bolt circle
73 Fit for centering pins
78 Fit for centering

Tool-side adapter plate with ISO 9409 screw connection pattern.

Description	ID	Height
		[mm]
Tool side		
A-DDF 2-100-T	0323225	19.5

Connection cables

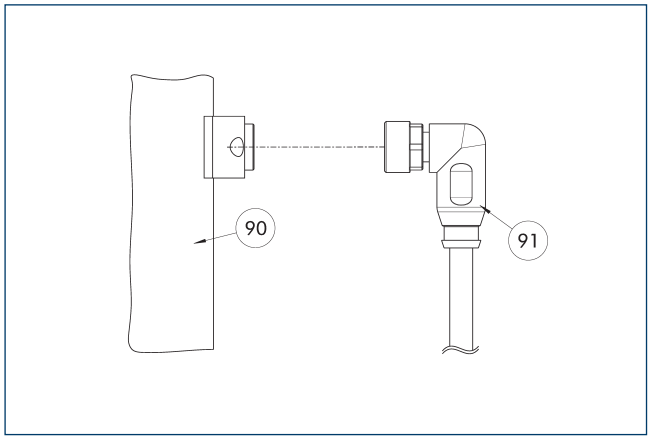

90 Electrical connection component
91 Cable with angled connector

Description	ID	Length
		[m]
Connection cable – suitable for drag chains and a high torsion resistance		
KA BW9-L7P-0200	0323001	2
KA BW9-L7P-0500	0323003	5
KA SW9-L7P-0200	0323002	2
KA SW9-L7P-0500	0323004	5

ⓘ The connection cables are suitable for use in a cable track and for robot applications.KA BW = robot side, KA SW = tool side

DDF 2 100-1

Rotary feed-through for robots

Dimensions and maximum loads

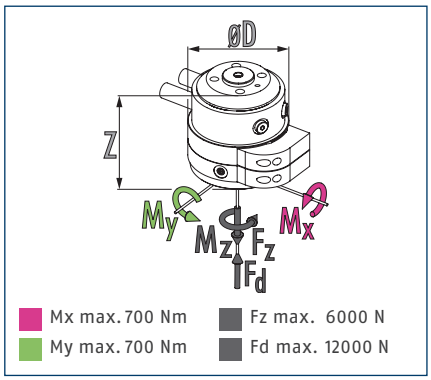

ⓘ Static forces and moments which may act on the rotary feed-through

Technical data

Description		DDF 2-100-1-P4-E10
ID		0323113
Recommended handling weight	[kg]	175
Max. drive speed	[1/min]	90
Max. speed of rotation	[°/s]	540
Nominal torque	[Nm]	22
Starting torque	[Nm]	25
Angle of rotation	[°]	>360
No. of fluid feed-throughs		4
Air connection thread pneumatic feed-through		4x G1/8"
Max. pressure per connection	[bar]	10
Rate of flow at 6 bar (per channel)	[l/min]	370
Max. air pressure air purge	[bar]	1
Number of electrical feed-throughs		10
Max. voltage	[V]	60
Max. current strength	[A]	1
Weight	[kg]	13.3
Robot-side connection		ISO 9409-1-100-6-M8
Min./max. ambient temperature	[°C]	5/60
Max. dynamic bending moment Mx*	[Nm]	450
Max. dynamic bending moment My*	[Nm]	450
Max. dynamic torsional moment Mz*	[Nm]	350
Max. shear force Fq*	[N]	1750
Dimensions Ø D x Z	[mm]	200 x 152.9

* *This is the max. total of all payloads (acceleration forces and torques, process forces, emergency stops, etc.), which can affect a rotary feed-through, in order to ensure error-free function.

A version for vacuum feed-through is available on request. Please ask for details.

Main view DDF 2 with electric and pneumatic feed-through

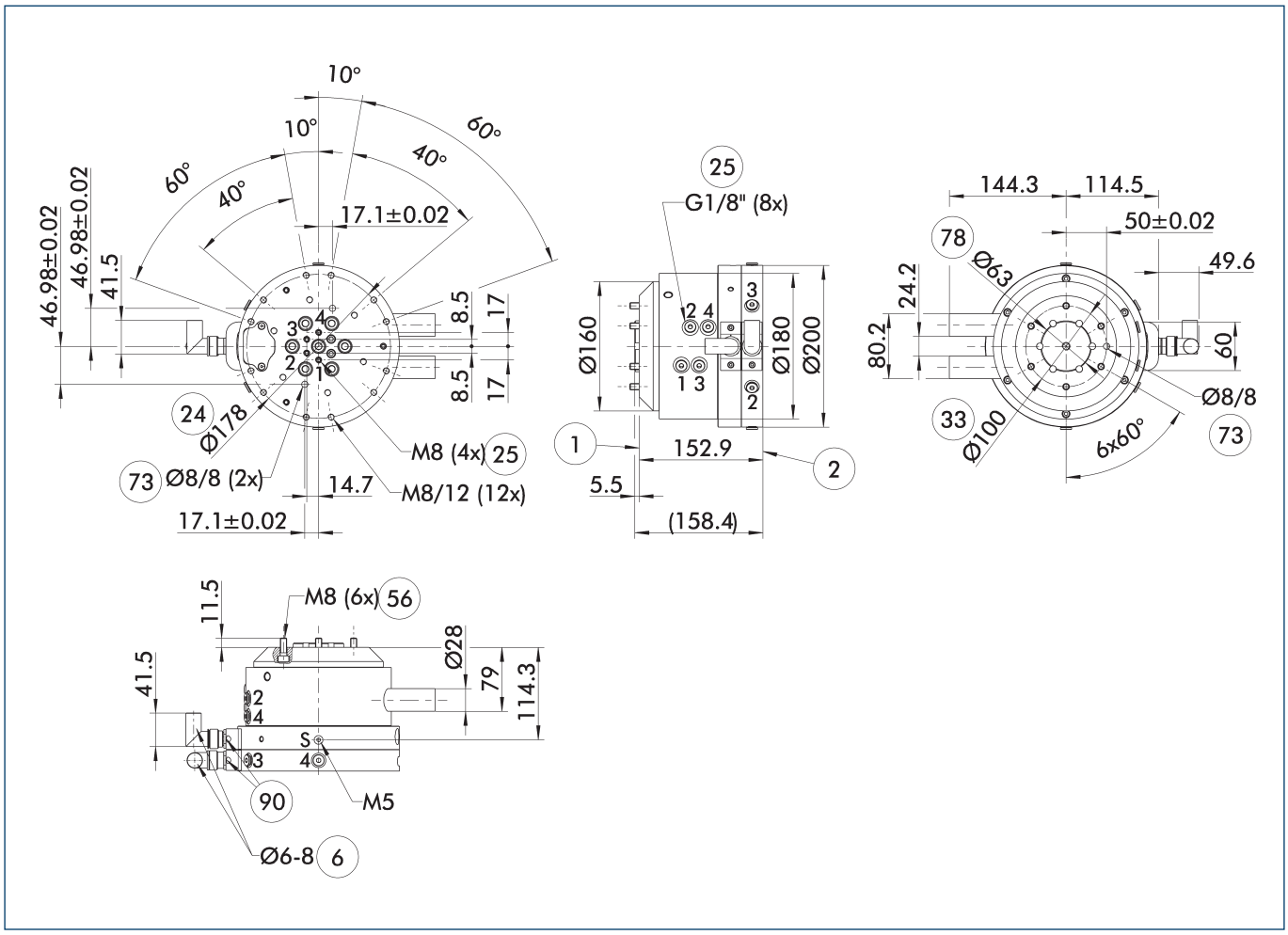

The main view shows the DDF 2 without consideration of following options, but with air and electrical feed-throughs including electrical connectors for the robot- and tool-sides. These are included in the scope of delivery.

- S Air purge connection
- (1) Robot-side connection
- (2) Tool-side connection
- (6) Cable diameter to be used
- (24) Bolt circle
- (25) Pneumatic feed-throughs
- (33) DIN ISO-9409 bolt circle
- (56) Included in the scope of delivery
- (73) Fit for centering pins
- (78) Fit for centering
- (90) Cable connectors/sockets included in the accessory pack

Mounting instruction

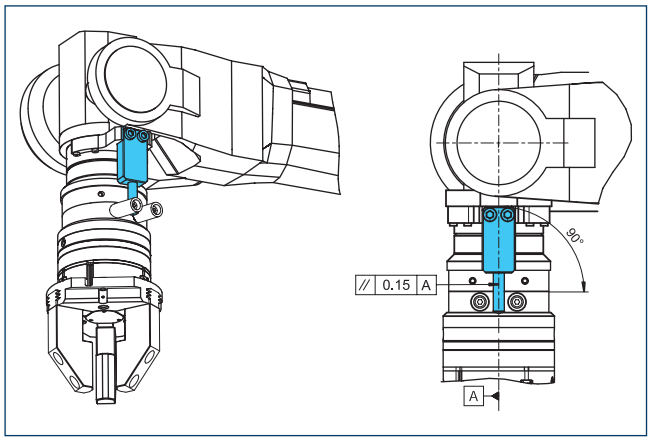

Design note for customer provided torque support

Adapter plate DDF 2-100-1-T

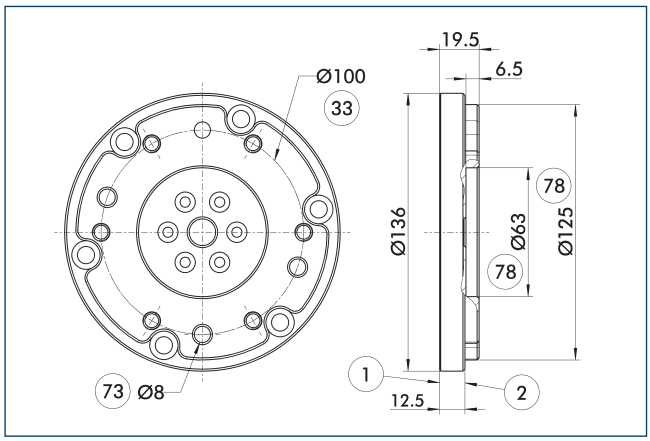

1 Robot-side connection
2 Tool-side connection
33 DIN ISO-9409 bolt circle
73 Fit for centering pins
78 Fit for centering

Tool-side adapter plate with ISO 9409 screw connection pattern.

Description	ID	Height
		[mm]
Tool side		
A-DDF 2-100-T	0323225	19.5

Connection cables

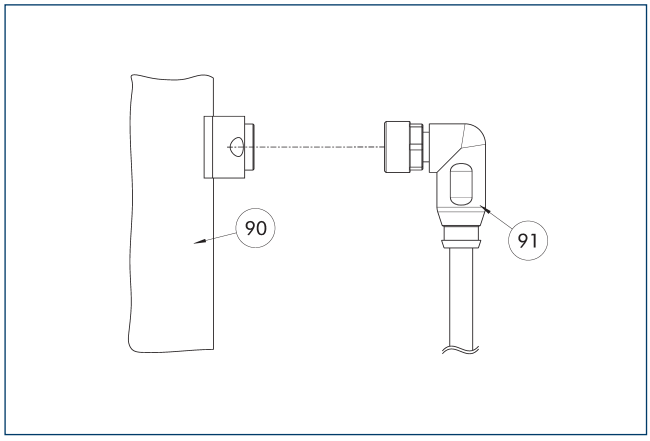

90 Electrical connection component
91 Cable with angled connector

Description	ID	Length
		[m]
Connection cables		
KA BW16-L 12P-0500	0323005	5
KA SW16-L 12P-0500	0323006	5

ⓘ The connection cables are suitable for use in a cable track and for robot applications.KA BW = robot side, KA SW = tool side

DDF 2 125

Rotary feed-through for robots

Dimensions and maximum loads

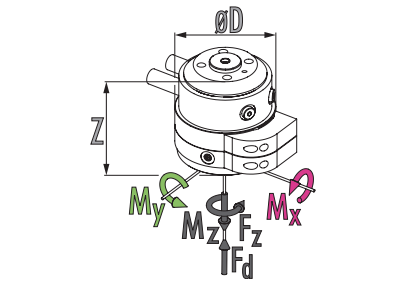

Mx max. 900 Nm
My max. 900 Nm
Fz max. 9000 N
Fd max. 18000 N

ⓘ Static forces and moments which may act on the rotary feed-through

Technical data

Description		DDF 2-125-P4-E10
ID		0323137
Recommended handling weight	[kg]	225
Max. drive speed	[1/min]	90
Max. speed of rotation	[°/s]	540
Nominal torque	[Nm]	22
Starting torque	[Nm]	25
Angle of rotation	[°]	>360
No. of fluid feed-throughs		4
Air connection thread pneumatic feed-through		4x G1/8"
Max. pressure per connection	[bar]	10
Rate of flow at 6 bar (per channel)	[l/min]	370
Max. air pressure air purge	[bar]	1
Number of electrical feed-throughs		10
Max. voltage	[V]	60
Max. current strength	[A]	1
Weight	[kg]	13.9
Robot-side connection		ISO 9409-1-125-6-M10
Min./max. ambient temperature	[°C]	5/60
Max. dynamic bending moment Mx*	[Nm]	520
Max. dynamic bending moment My*	[Nm]	520
Max. dynamic torsional moment Mz*	[Nm]	400
Max. shear force Fq*	[N]	2250
Dimensions Ø D x Z	[mm]	200 x 156.9

* *This is the max. total of all payloads (acceleration forces and torques, process forces, emergency stops, etc.), which can affect a rotary feed-through, in order to ensure error-free function.

A version for vacuum feed-through is available on request. Please ask for details.

Main view DDF 2 with electric and pneumatic feed-through

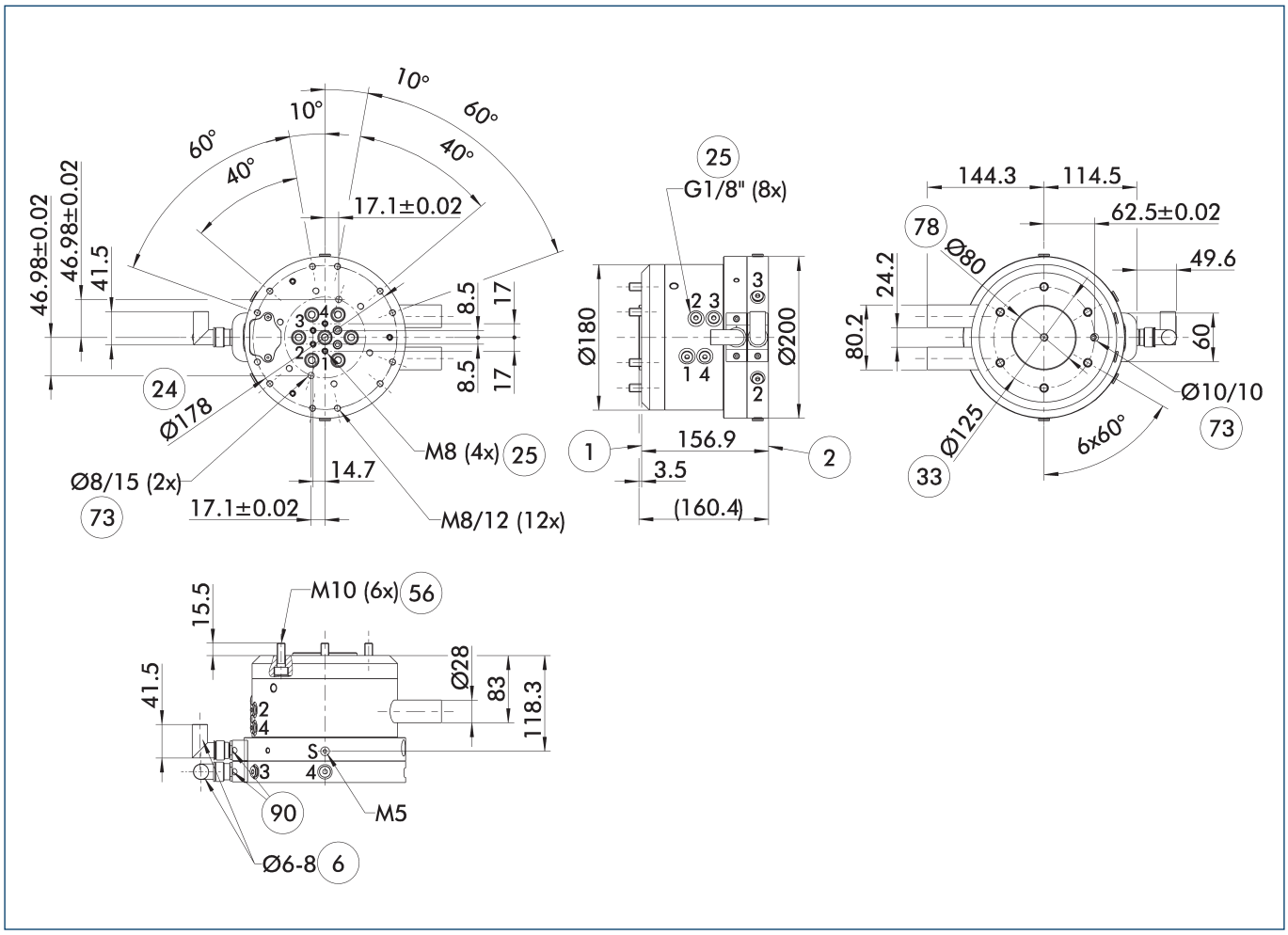

The main view shows the DDF 2 without consideration of following options, but with air and electrical feed-throughs including electrical connectors for the robot- and tool-sides. These are included in the scope of delivery.

- S Air purge connection
- (1) Robot-side connection
- (2) Tool-side connection
- (6) Cable diameter to be used
- (24) Bolt circle
- (25) Pneumatic feed-throughs
- (33) DIN ISO-9409 bolt circle
- (56) Included in the scope of delivery
- (73) Fit for centering pins
- (78) Fit for centering
- (90) Cable connectors/sockets included in the accessory pack

Mounting instruction

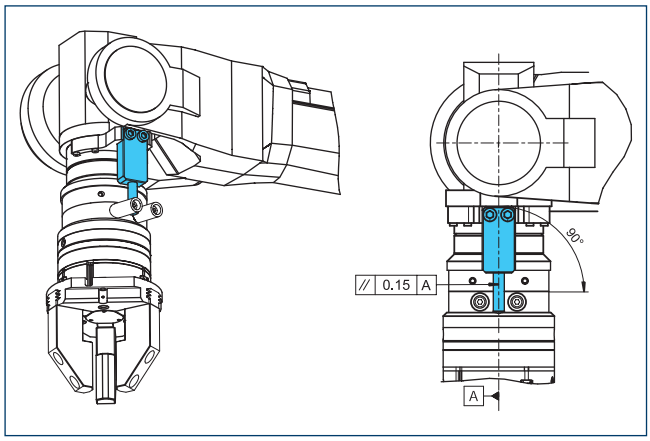

Design note for customer provided torque support

Adapter plates DDF 2-125-T

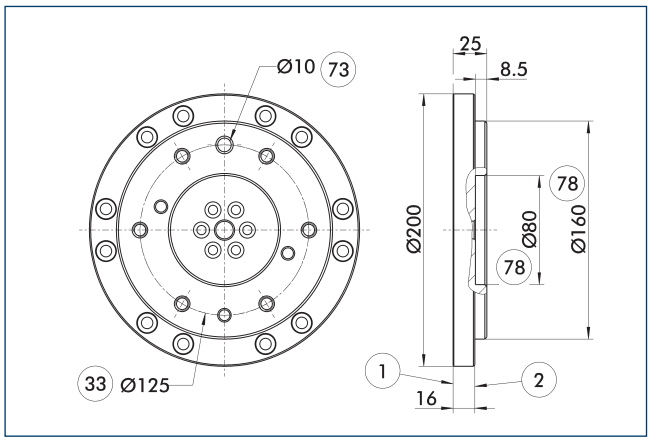

1 Robot-side connection
2 Tool-side connection
33 DIN ISO-9409 bolt circle
73 Fit for centering pins
78 Fit for centering

Tool-side adapter plate with ISO 9409 screw connection pattern.

Description	ID	Height
		[mm]
Tool side		
A-DDF 2-125-T	0323226	25

Connection cables

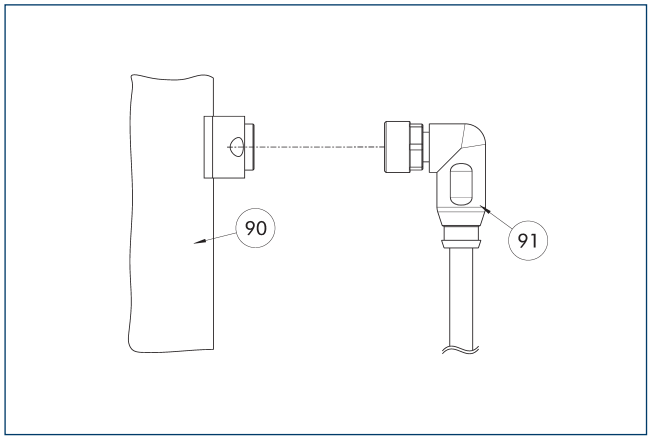

90 Electrical connection component
91 Cable with angled connector

Description	ID	Length
		[m]
Connection cables		
KA BW16-L 12P-0500	0323005	5
KA SW16-L 12P-0500	0323006	5

ⓘ The connection cables are suitable for use in a cable track and for robot applications.KA BW = robot side, KA SW = tool side

DDF 2 160

Rotary feed-through for robots

Dimensions and maximum loads

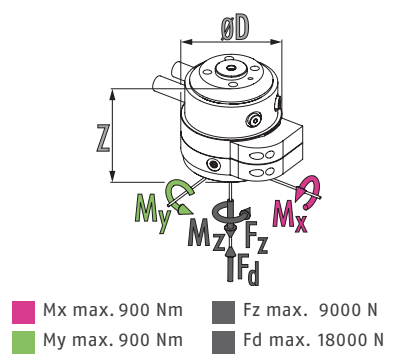

ⓘ Static forces and moments which may act on the rotary feed-through

Technical data

Description		DDF 2-160-P4-E10
ID		0323173
Recommended handling weight	[kg]	250
Max. drive speed	[1/min]	90
Max. speed of rotation	[°/s]	540
Nominal torque	[Nm]	22
Starting torque	[Nm]	25
Angle of rotation	[°]	>360
No. of fluid feed-throughs		4
Air connection thread pneumatic feed-through		4x G1/8"
Max. pressure per connection	[bar]	10
Rate of flow at 6 bar (per channel)	[l/min]	370
Max. air pressure air purge	[bar]	1
Number of electrical feed-throughs		10
Max. voltage	[V]	60
Max. current strength	[A]	1
Weight	[kg]	14.2
Robot-side connection		ISO 9409-1-160-6-M10
		ISO 9409-1-160-11-M12
Min./max. ambient temperature	[°C]	5/60
Max. dynamic bending moment Mx*	[Nm]	550
Max. dynamic bending moment My*	[Nm]	550
Max. dynamic torsional moment Mz*	[Nm]	400
Max. shear force Fq*	[N]	2500
Dimensions Ø D x Z	[mm]	200 x 156.9

* *This is the max. total of all payloads (acceleration forces and torques, process forces, emergency stops, etc.), which can affect a rotary feed-through, in order to ensure error-free function.

A version for vacuum feed-through is available on request. Please ask for details.

Main view DDF 2 with electric and pneumatic feed-through

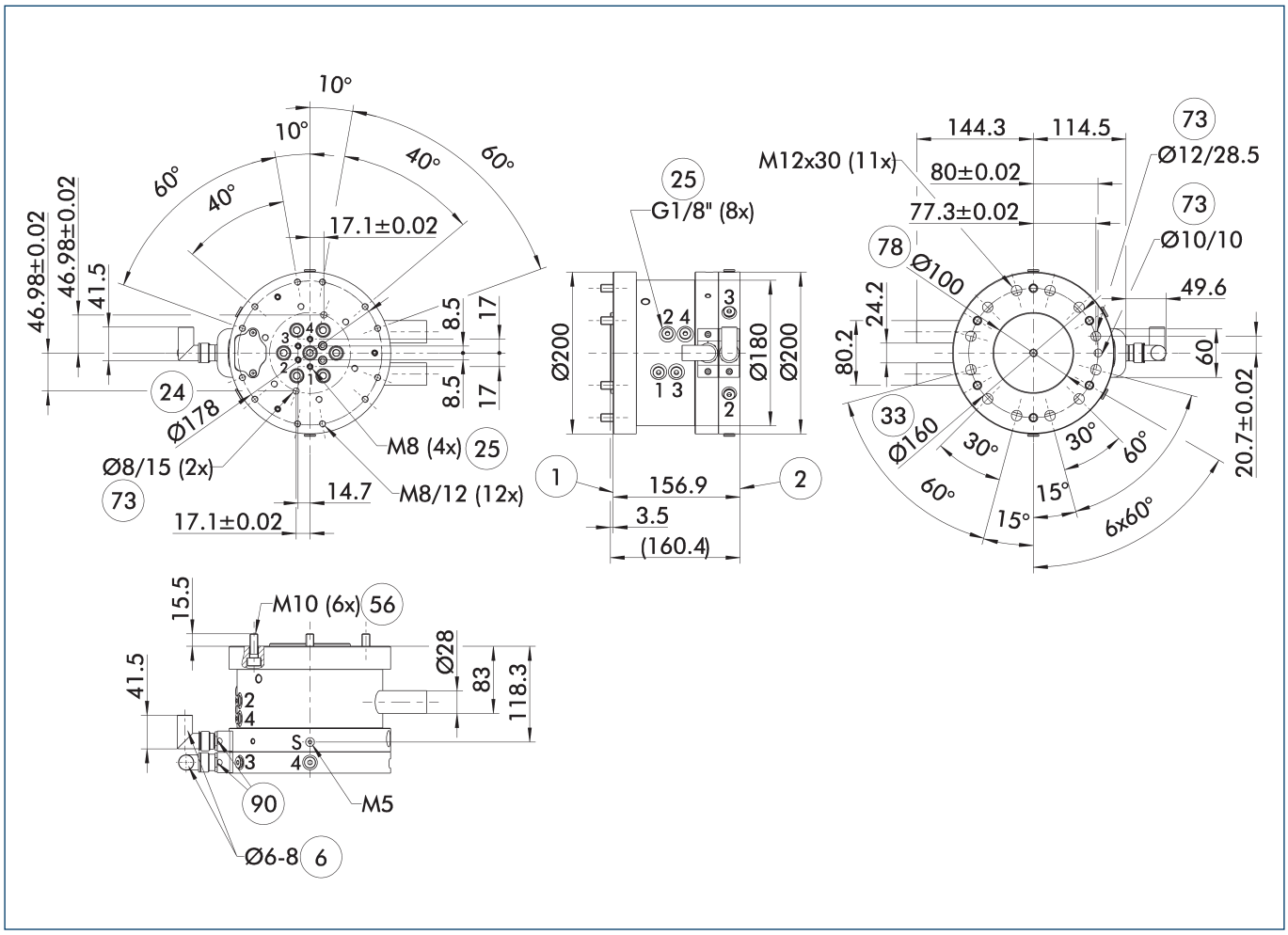

The main view shows the DDF 2 without consideration of following options, but with air and electrical feed-throughs including electrical connectors for the robot- and tool-sides. These are included in the scope of delivery.

- S Air purge connection
- (1) Robot-side connection
- (2) Tool-side connection
- (6) Cable diameter to be used
- (24) Bolt circle
- (25) Pneumatic feed-throughs
- (33) DIN ISO-9409 bolt circle
- (56) Included in the scope of delivery
- (73) Fit for centering pins
- (78) Fit for centering
- (90) Cable connectors/sockets included in the accessory pack

Mounting instruction

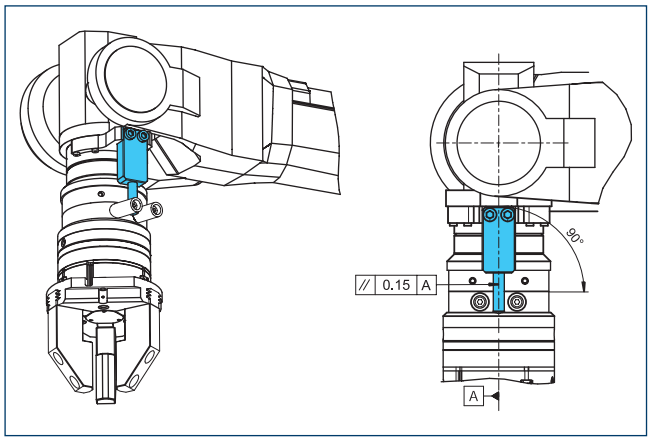

Design note for customer provided torque support

Adapter plates DDF 2-160-T

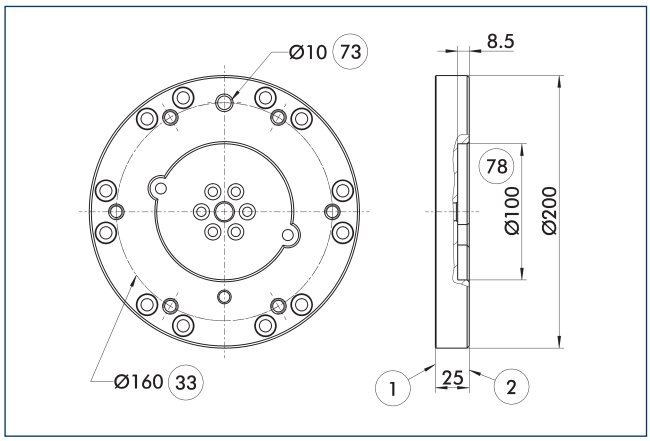

1 Robot-side connection
2 Tool-side connection
33 DIN ISO-9409 bolt circle
73 Fit for centering pins
78 Fit for centering

Tool-side adapter plate with ISO-9409 screw connection diagram.

Description	ID	Height
		[mm]
Tool side		
A-DDF 2-160-T	0323227	25

Connection cables

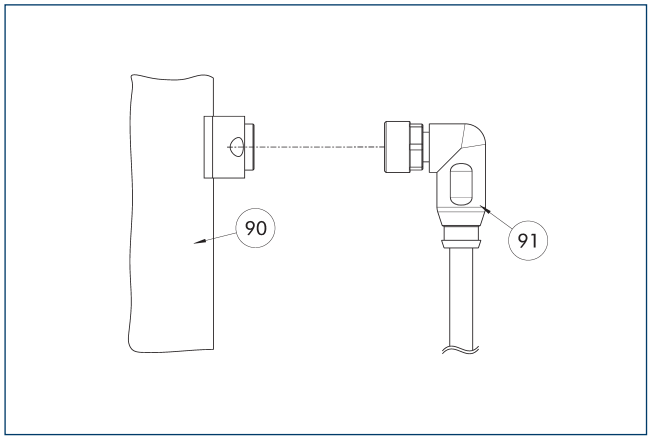

90 Electrical connection component
91 Cable with angled connector

Description	ID	Length
		[m]
Connection cables		
KA BW16-L 12P-0500	0323005	5
KA SW16-L 12P-0500	0323006	5

ⓘ The connection cables are suitable for use in a cable track and for robot applications.KA BW = robot side, KA SW = tool side

SCHUNK SE & Co. KG
Spanntechnik
Greiftechnik
Automatisierungstechnik

Bahnhofstr. 106 - 134
D-74348 Lauffen/Neckar
Tel. +49-7133-103-0
Fax +49-7133-103-2399
info@de.schunk.com
schunk.com

Folgen Sie uns | *Follow us*

2025-06-05 © 2025 SCHUNK SE & Co. KG