Superior Clamping and Gripping

Product Information

Long-stroke gripper PEH

Flexible. High Performance Density. Bus capable.

Long-stroke gripper PEH

Servo-electric 2-finger parallel gripper with long jaw stroke for large parts and diverse parts spectrum

Field of application

Versatile, highly flexible gripper for large diversity of parts in clean to slightly contaminated work environment

Advantages – Your benefits

Gripping force control in a range of 100 N – 1,800 N for powerful gripping of a wide variety of workpieces

Large stroke of 200 mm for flexible workpiece handling

Fully integrated control and power electronics for creating a decentralized control system

Versatile actuation options for simple integration into existing control concepts via PROFIBUS-DP, or CAN

Robust sliding guide for the precise handling of different workpieces

High maximum moments possible suitable for using long gripper fingers

Mounting from two sides in three screw directions for universal and flexible gripper assembly

Sizes	Weight	Gripping force	Stroke per jaw	Workpiece weight
Quantity: 3	5.4 .. 16.8 kg	750 .. 1800 N	60 .. 100 mm	2 .. 9 kg

Functional description

The brushless servomotor drives the ball screw via a toothed belt drive.
A base jaw is moved by means of a carrier on the spindle.
The jaw stroke is synchronized by means of rack and pinion kinematics.

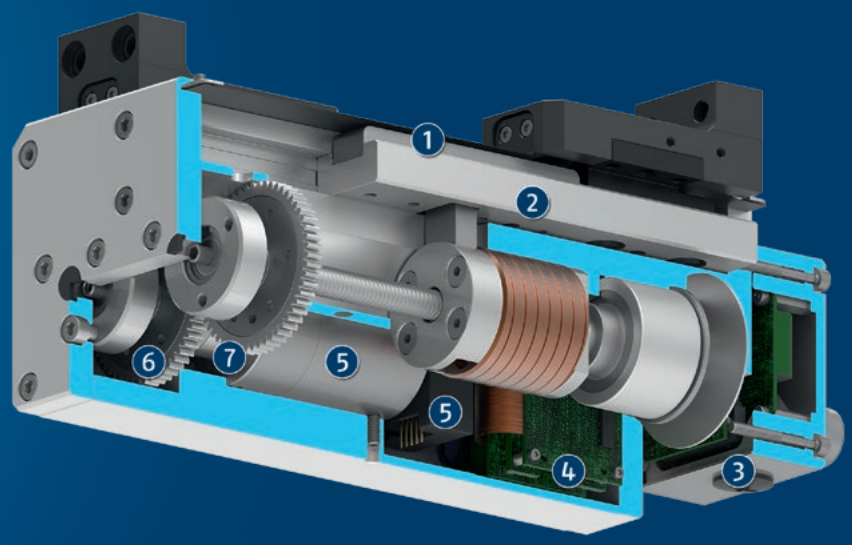

① **Kinematics**
Rack and pinion principle for centric gripping

② **Sliding guide**
for precise gripping with minimal play at a high load capacity

③ **Connection cap DMI**
electric connection for energy supply and communication

④ **Control electronics**
Integrated control and power electronics for decentralized control of the servomotor

⑤ **Drive**
brushless DC servomotor with hall-effect sensors and encoder

⑥ **Gear mechanism**
Force transmission from the servomotor to the drive spindle

⑦ **Brake**
for maintaining position on shutdown and power failure

General notes about the series

Operating principle: Spindle drive, synchronized by rack and pinion principle

Housing material: Aluminum alloy, coated

Base jaw material: Steel

Actuation: servo-electric, via brushless DC servomotor

Warranty: 24 months

Scope of delivery: Accessory kit with centering sleeves, assembly and operating manual with declaration of incorporation, DVD with SCHUNK software and commissioning assistant, functional module for control via Siemens S7-300/400. A DMI electrical connection cap is required to operate the gripper. It is not included in the scope of delivery and has to be ordered separately.

Gripping force: is the arithmetic sum of the individual force applied to each jaw at distance P (see illustration).

Finger length: is measured from the reference surface as the distance P in direction to the main axis.

Repeat accuracy: is defined as a distribution of the end Position for 100 consecutive strokes.

Workpiece weight: is calculated for force-fit gripping with a coefficient of static friction of 0.1 and a safety factor of 2 against workpiece slippage at acceleration due to gravity g. For form-fit or capture gripping, there are significantly higher permissible workpiece weights.

Closing and opening times: Minimum closing and opening times are merely the movement times of the base jaws or fingers at max. speed, max. acceleration, without current limitation (maximum current), and observance of the maximum permissible mass per finger.

Nominal currents: can be permanently actuated. With regard to all the currents which are ranging above the nominal current up to the maximum current, the notes of the individual product documentation has to be respected.

Electrical brake: The built-in, electric holding break is used for fixing and holding the position of the gripper jaws in the event of a power failure. It cannot cover all of the security or gripping force maintenance functions.

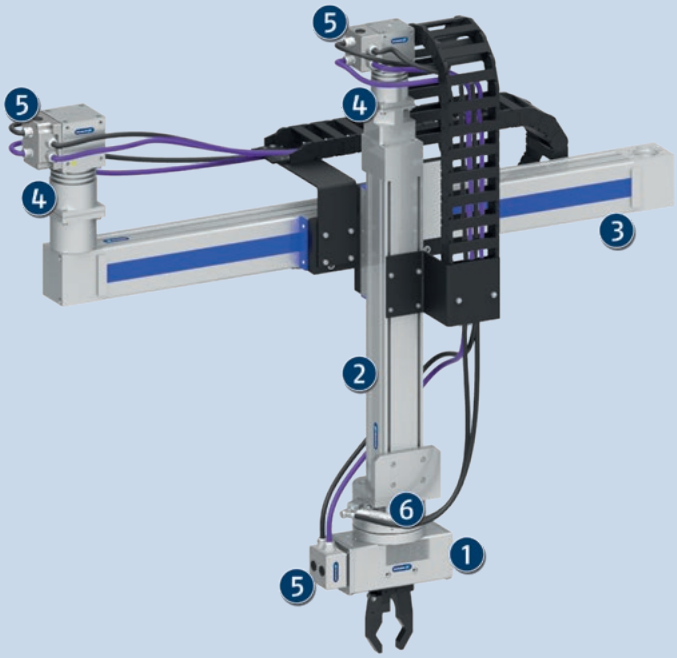

Application example

Fully electrically driven gantry axis for loading and depalletizing of various components.

1. Long-stroke gripper PEH
2. Vertical axis with spindle drive Beta
3. Linear module Beta with toothed-belt drive
4. Servo electric drive with gear PDU
5. Connection cap DMI
6. Universal rotary module ERS

SCHUNK offers more ...

The following components make the product PEH even more productive – the suitable addition for the highest functionality, flexibility, reliability, and controlled production.

Rotation unit

Pan-tilt actuator

Linear module

Drive

Power cable

Connection cap

Force/torque sensor

Quick change system

Communication cables

ⓘ For more information on these products can be found on the following product pages or at schunk.com. Please contact us: SCHUNK technical hotline +49-7133-103-2696

Options and special information

Integrated electronics: The electrical control of the gripper is carried out by the fully integrated control and power electronics. Hence, the module does not require any additional external control units.
Easy integration: There is a varied range of interfaces available, such as PROFIBUS DP or CAN as types of communication. This enables the assembly of industrial bus networks and ensures simple integration into existing control concepts.
Connection cap DMI: The DMI connection cap is available for connecting the gripper to the voltage supply or higher-level control unit. It is not included in the scope of delivery and has to be ordered separately.

PEH 30

Long-stroke gripper

Gripping force

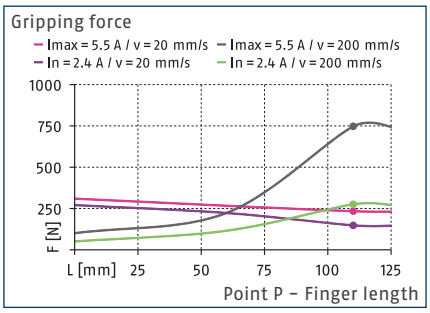

Speed

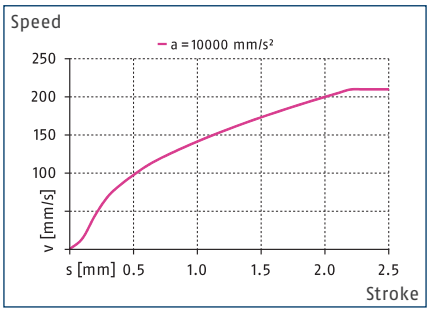

Dimensions and maximum loads

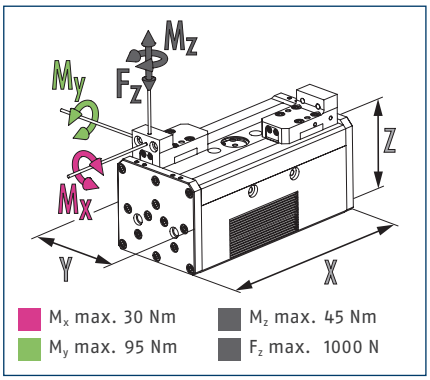

ⓘ The indicated moments and forces are statical values, apply for each base jaw and should not appear simultaneously. Loads may additionally occur to the moment produced by the gripping force itself.

Technical data

Characterization		PEH 30
ID		0306060
General operating data		
Stroke per jaw	[mm]	60
Min./max. gripping force	[N]	150/750
Recommended workpiece weight	[kg]	2
Max. permissible finger length	[mm]	125
Max. permissible mass per finger	[kg]	2
Repeat accuracy	[mm]	±0.05
Closing/opening time	[s]	1/1
Max. speed	[mm/s]	210
Max. acceleration	[mm/s²]	10000
Weight	[kg]	5.4
Min./max. ambient temperature	[°C]	5/45
IP protection class		41
Dimensions X x Y x Z	[mm]	215 x 100 x 92.8
Electrical operating data		
Nominal voltage	[V DC]	24
Nominal current	[A]	2.4
Max. current	[A]	8
Controller electronics		integrated
Communication interface		PROFIBUS, CAN, digital I/O
Data rate	[Mbit/s]	1.5
Data rate	[Mbit/s]	1
Number of digital I/O		4/4
Parametrized interface		RS232

ⓘ The recommended workpiece weight has been calculated for the maximum gripping force. The maximum gripping force can be achieved at max. speed and with max. current, which may only be applied temporarily. Please contact SCHUNK technical sales for further enquiries.

Main view

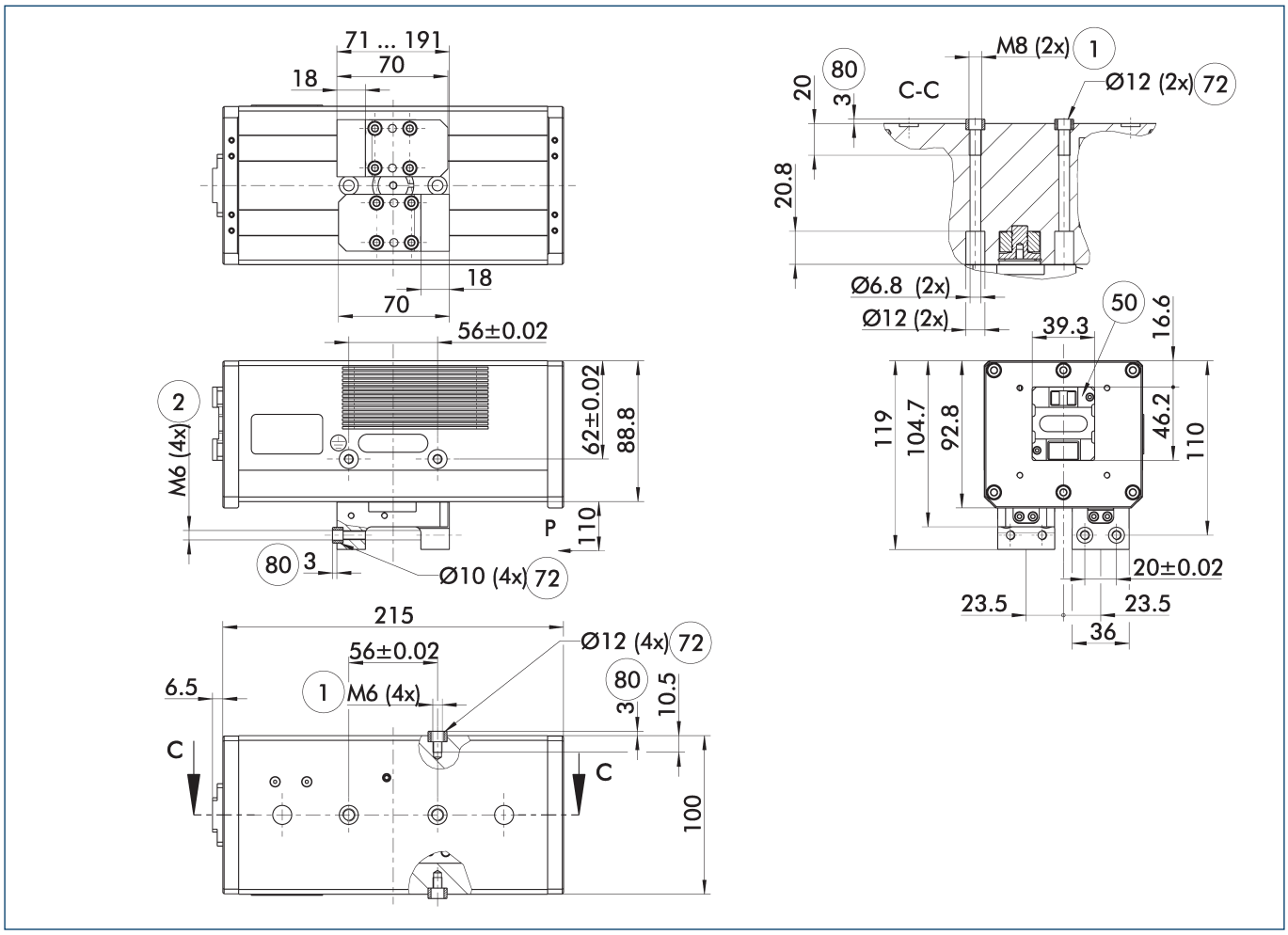

The drawing shows the gripper in the basic version with closed jaws, without dimensional consideration of the options described below.

1. Gripper connection
2. Finger connection
50. Electrical connection
72. Fit for centering sleeves
80. Depth of the centering sleeve hole in the counter part

Maximum permitted finger projection

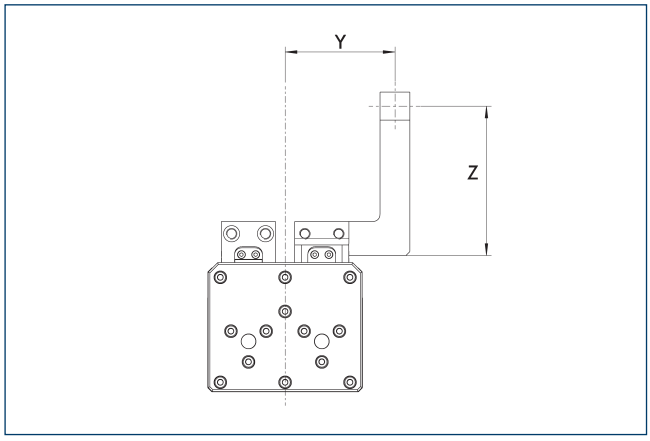

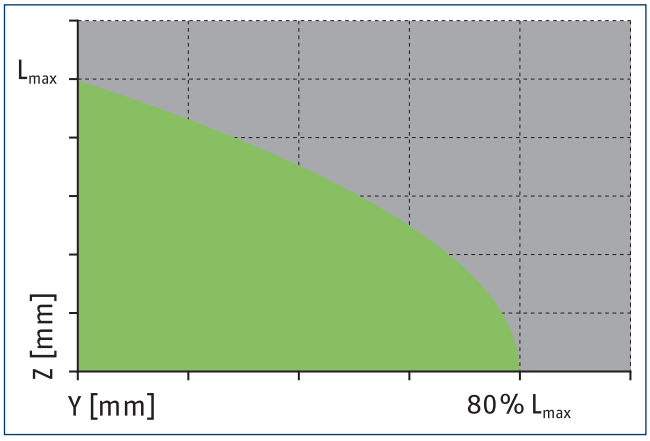

Permitted range

Inadmissible range

L^{max} is equivalent to the maximum permitted finger length, see the technical data table.

ZBA-PFH 30-100 intermediate jaws

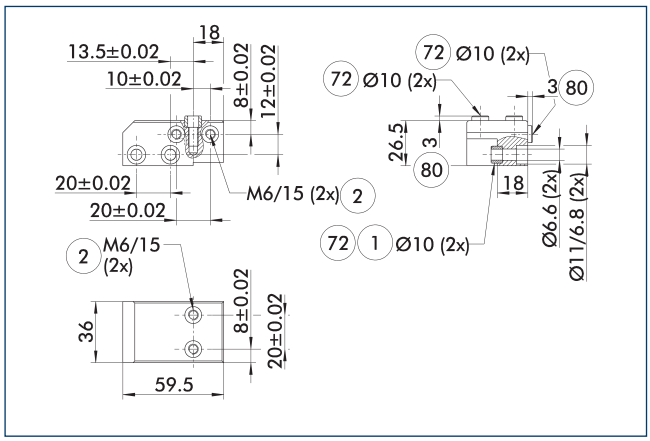

(1) Gripper connection
(2) Finger connection
(72) Fit for centering sleeves
(80) Depth of the centering sleeve hole in the counter part

The optional intermediate jaw makes a screw connection of the gripper fingers in Z-direction possible. Furthermore, the intermediate jaws compensate the parallel offset of the base jaws in Y- direction and enable an aligned connection. The design of the customer-specific gripper fingers is simplified as a result.

Characterization	ID	Material	Finger interface	Scope of delivery
Intermediate jaw				
ZBA-PFH 30-100	0300220	Steel	PGN-plus 100	2

Connection caps

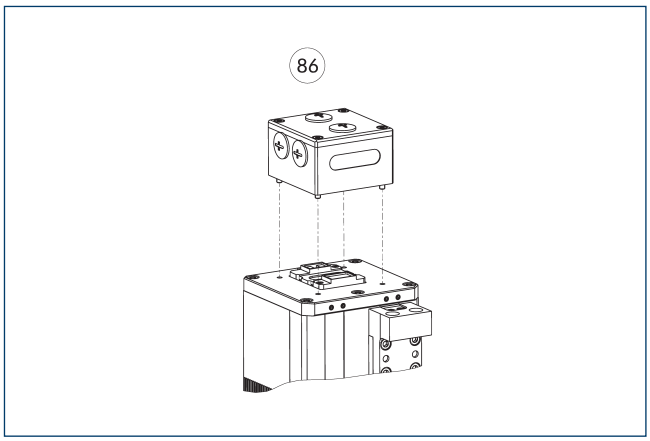

(86) Connection cap DMI

The DMI connection cap is required to connect the modules to the voltage supply or higher-level control unit. The wire strands are connected via connection terminals.

Characterization	ID	
Connection cap		
DMI 070-V05-B	0307732	

ⓘ Further information and accessories can be found in the following displays.

Connection cap DMI

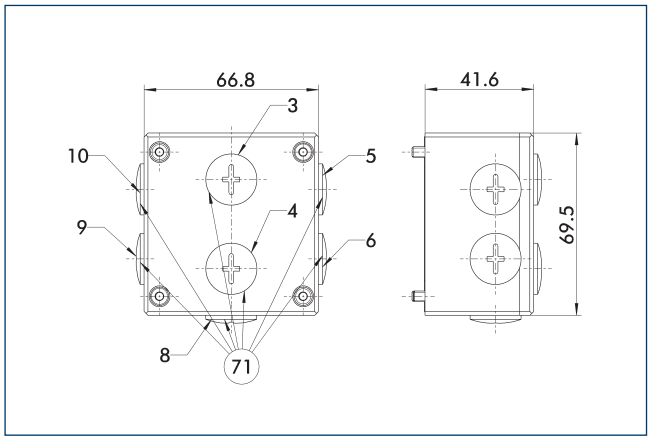

(71) M16x1.5 for cable guide penetrating screw connection

The DMI's wire strands are connected via connection terminals. The DMI is prepared for PROFIBUS and CAN communication interfaces.

Characterization	ID	
Connection cap		
DMI 070-V05-B	0307732	

PROFIBUS communication cables

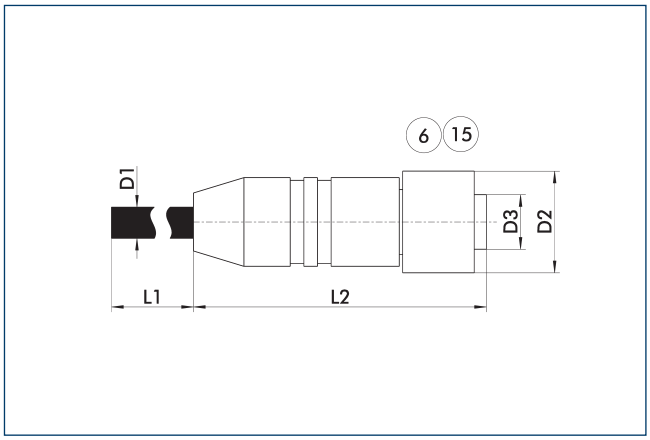

(6) Connection module side
(15) Socket

The communication cables are ready for use for the mechatronic SCHUNK products. They have M12 connectors on both sides.

Characterization	ID	L1	D1	L2	D2	D3
		[m]	[mm]	[mm]	[mm]	
PROFIBUS communication cable - drag chain suitable						
KA GGN1204-PB-00150-A	0349750	1.5	8	47	15	M12
KA GGN1204-PB-00300-A	0349751	3	8	47	15	M12
KA GGN1204-PB-00500-A	0349752	5	8	47	15	M12
KA GGN1204-PB-01000-A	0349753	10	8	47	15	M12

ⓘ Please observe the min. bending radius for cable track-compatible cables or the max. torsion angle for torsion-compatible cables. These are generally 10 times the cable diameter or +/- 180°/m.

CAN communication cables

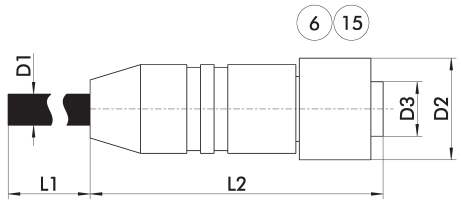

6 Connection module side 15 Socket

The communication cables are ready for use for the mechatronic SCHUNK products. They have M12 connectors on both sides.

Characterization	ID	L1	D1	L2	D2	D3
		[m]	[mm]	[mm]	[mm]	
CAN communication cable – drag chain suitable						
KA GGN1204-CN-00150-A	0349770	1.5	7	47	15	M12
KA GGN1204-CN-00300-A	0349771	3	7	47	15	M12
KA GGN1204-CN-00500-A	0349772	5	7	47	15	M12
KA GGN1204-CN-01000-A	0349773	10	7	47	15	M12

ⓘ Please observe the min. bending radius for cable track-compatible cables or the max. torsion angle for torsion-compatible cables. These are generally 10 times the cable diameter or +/- 180°/m.

Termination resistor

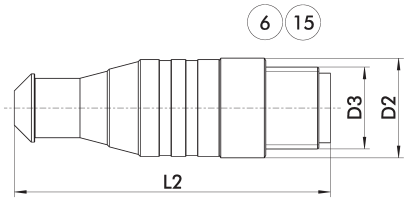

6 Connection module side 15 Socket

The terminating resistors are provided for terminating the bus string directly at the SCHUNK module.

Characterization	ID	L2	D2	D3
		[mm]	[mm]	
Termination resistor – CAN				
ST SG1204-CN-A-A	0349660	47	15	M12
Termination resistor – PROFIBUS				
ST SG1204-PB-A-A	0349650	47	15	M12

ⓘ An appropriate terminating resistor must be installed on the last module in the CAN or PROFIBUS string.

PEH 40

Long-stroke gripper

Gripping force O.D. gripping

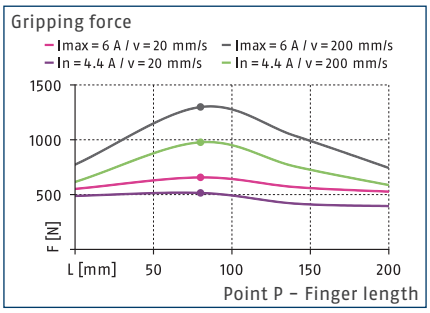

Speed

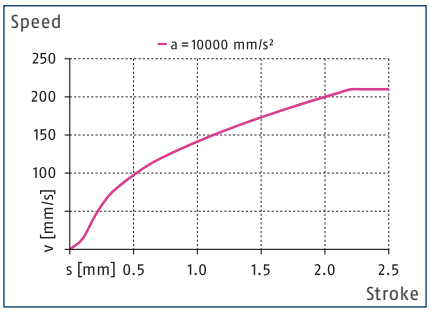

Dimensions and maximum loads

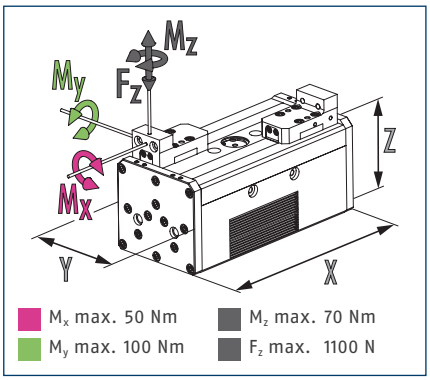

ⓘ The indicated moments and forces are statical values, apply for each base jaw and should not appear simultaneously. Loads may additionally occur to the moment produced by the gripping force itself.

Technical data

Characterization		PEH 40
ID		0306062
General operating data		
Stroke per jaw	[mm]	60
Min./max. gripping force	[N]	150/1300
Recommended workpiece weight	[kg]	4
Max. permissible finger length	[mm]	200
Max. permissible mass per finger	[kg]	3
Repeat accuracy	[mm]	±0.05
Closing/opening time	[s]	1/1
Max. speed	[mm/s]	210
Max. acceleration	[mm/s²]	10000
Weight	[kg]	7.8
Min./max. ambient temperature	[°C]	5/55
IP protection class		41
Dimensions X x Y x Z	[mm]	240 x 114 x 94.8
Electrical operating data		
Nominal voltage	[V DC]	24
Nominal current	[A]	4.4
Max. current	[A]	12.4
Controller electronics		integrated
Communication interface		PROFIBUS, CAN, digital I/O
Data rate	[Mbit/s]	1.5
Data rate	[Mbit/s]	1
Number of digital I/O		4/4
Parametrized interface		RS232

ⓘ The recommended workpiece weight has been calculated for the maximum gripping force. The maximum gripping force can be achieved at max. speed and with max. current, which may only be applied temporarily. Please contact SCHUNK technical sales for further enquiries.

Main view

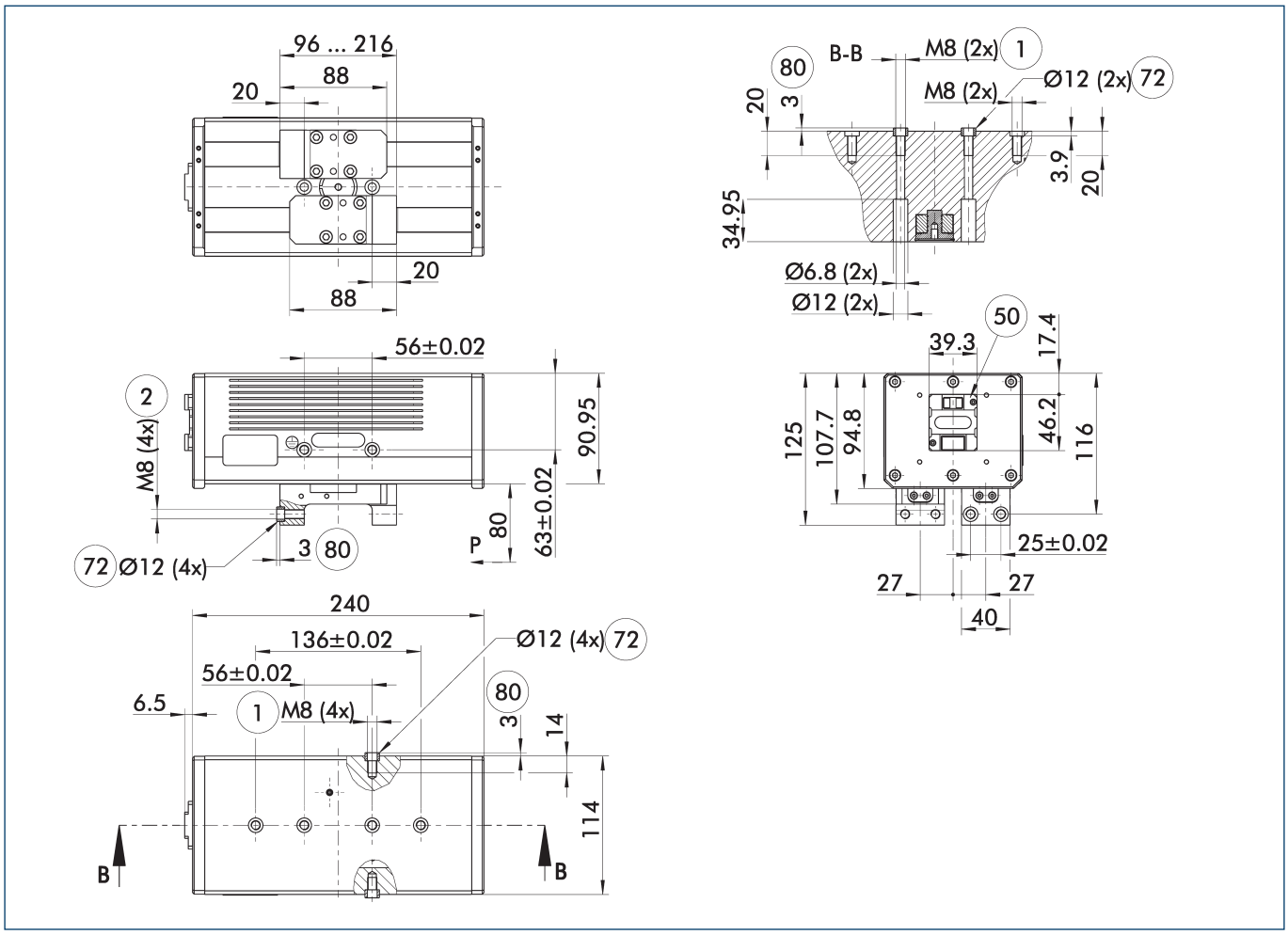

The drawing shows the gripper in the basic version with closed jaws, without dimensional consideration of the options described below.

1. Gripper connection
2. Finger connection
50. Electrical connection
72. Fit for centering sleeves
80. Depth of the centering sleeve hole in the counter part

Maximum permitted finger projection

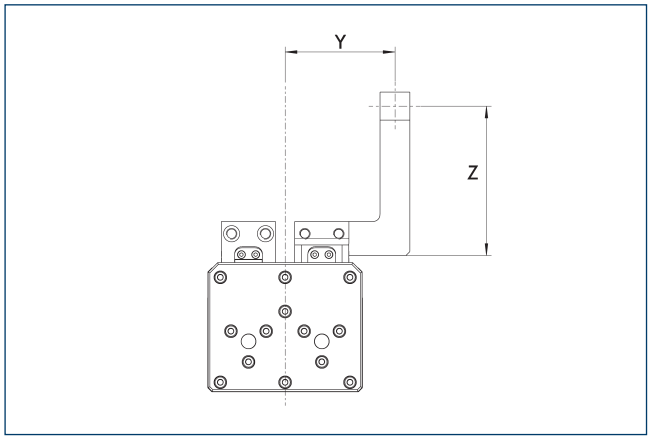

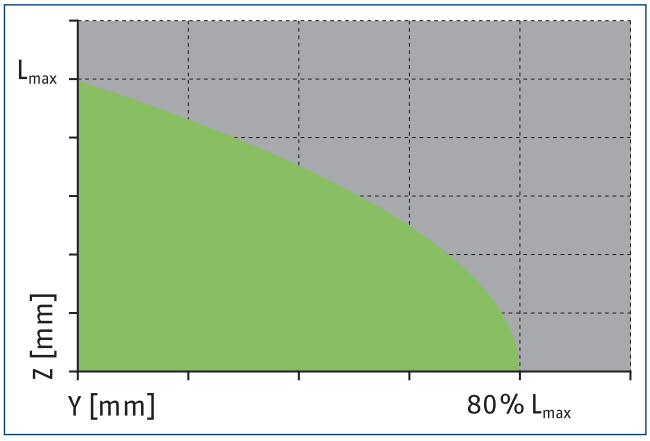

Permitted range

Inadmissible range

L^{max} is equivalent to the maximum permitted finger length, see the technical data table.

ZBA-PFH 40-125 intermediate jaw

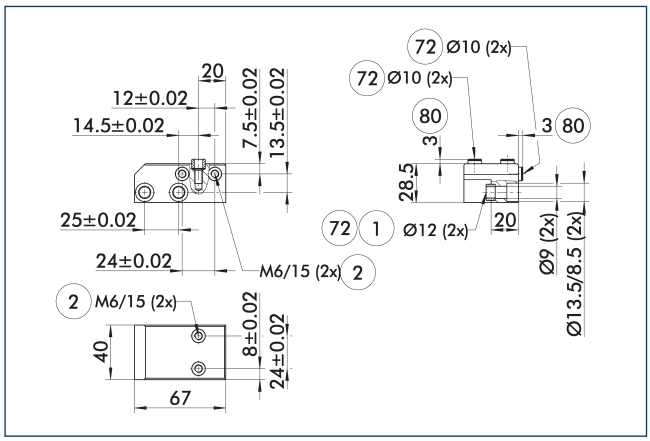

(1) Gripper connection
(2) Finger connection
(72) Fit for centering sleeves
(80) Depth of the centering sleeve hole in the counter part

The optional intermediate jaw makes a screw connection of the gripper fingers in Z-direction possible. Furthermore, the intermediate jaws compensate the parallel offset of the base jaws in Y- direction and enable an aligned connection. The design of the customer-specific gripper fingers is simplified as a result.

Characterization	ID	Material	Finger interface	Scope of delivery
Intermediate jaw				
ZBA-PFH 40-125	0300223	Steel	PGN-plus 125	2

ZBA-PFH 40 intermediate jaw

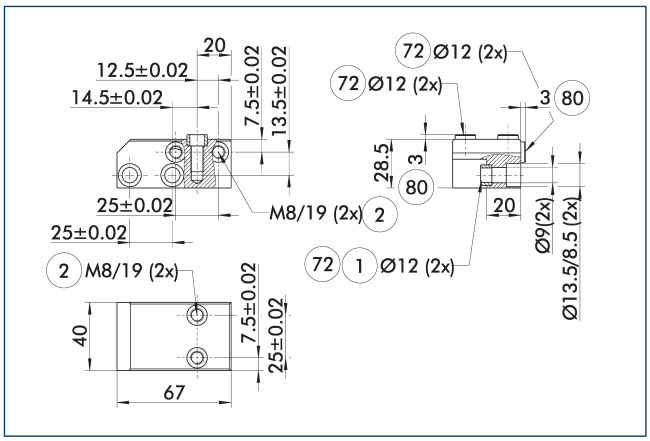

(1) Gripper connection
(2) Finger connection
(72) Fit for centering sleeves
(80) Depth of the centering sleeve hole in the counter part

Characterization	ID	Material	Scope of delivery
Intermediate jaw			
ZBA-PFH 40	0300221	Steel	2

Connection caps

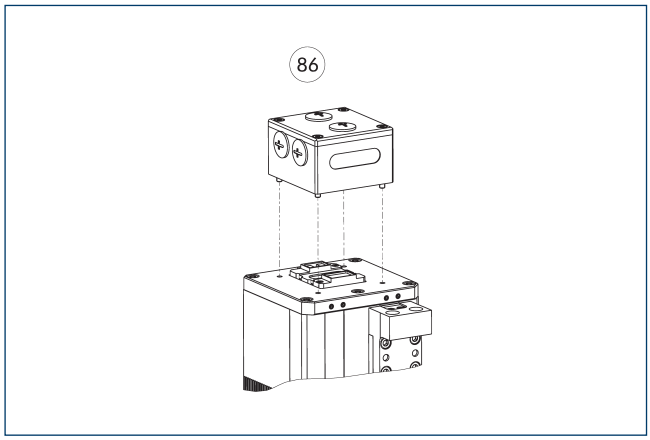

(86) Connection cap DMI

The DMI connection cap is required to connect the modules to the voltage supply or higher-level control unit. The wire strands are connected via connection terminals.

Characterization	ID	
Connection cap		
DMI 070-V05-B	0307732	

ⓘ Further information and accessories can be found in the following displays.

Connection cap DMI

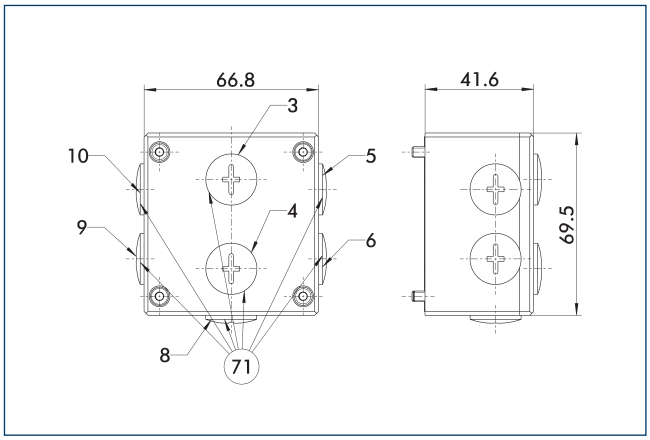

(71) M16x1.5 for cable guide penetrating screw connection

The DMI's wire strands are connected via connection terminals. The DMI is prepared for PROFIBUS and CAN communication interfaces.

Characterization	ID	
Connection cap		
DMI 070-V05-B	0307732	

PROFIBUS communication cables

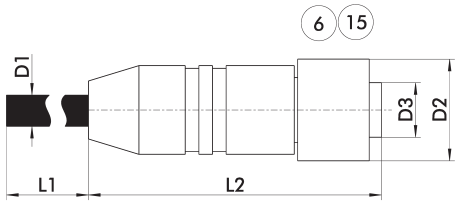

(6) Connection module side (15) Socket

The communication cables are ready for use for the mechatronic SCHUNK products. They have M12 connectors on both sides.

Characterization	ID	L1	D1	L2	D2	D3
		[m]	[mm]	[mm]	[mm]	
PROFIBUS communication cable – drag chain suitable						
KA GGN1204-PB-00150-A	0349750	1.5	8	47	15	M12
KA GGN1204-PB-00300-A	0349751	3	8	47	15	M12
KA GGN1204-PB-00500-A	0349752	5	8	47	15	M12
KA GGN1204-PB-01000-A	0349753	10	8	47	15	M12

ⓘ Please observe the min. bending radius for cable track-compatible cables or the max. torsion angle for torsion-compatible cables. These are generally 10 times the cable diameter or +/- 180°/m.

CAN communication cables

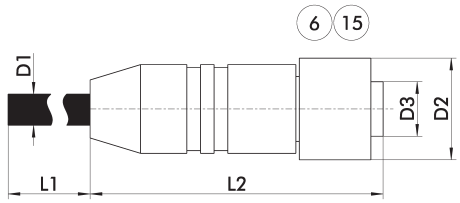

(6) Connection module side (15) Socket

The communication cables are ready for use for the mechatronic SCHUNK products. They have M12 connectors on both sides.

Characterization	ID	L1	D1	L2	D2	D3
		[m]	[mm]	[mm]	[mm]	
CAN communication cable – drag chain suitable						
KA GGN1204-CN-00150-A	0349770	1.5	7	47	15	M12
KA GGN1204-CN-00300-A	0349771	3	7	47	15	M12
KA GGN1204-CN-00500-A	0349772	5	7	47	15	M12
KA GGN1204-CN-01000-A	0349773	10	7	47	15	M12

ⓘ Please observe the min. bending radius for cable track-compatible cables or the max. torsion angle for torsion-compatible cables. These are generally 10 times the cable diameter or +/- 180°/m.

Termination resistor

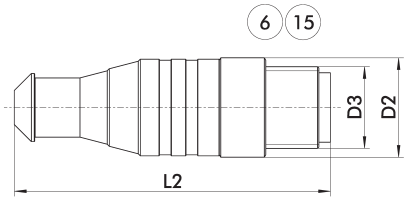

(6) Connection module side (15) Socket

The terminating resistors are provided for terminating the bus string directly at the SCHUNK module.

Characterization	ID	L2	D2	D3
		[mm]	[mm]	
Termination resistor – CAN				
ST SG1204-CN-A-A	0349660	47	15	M12
Termination resistor – PROFIBUS				
ST SG1204-PB-A-A	0349650	47	15	M12

ⓘ An appropriate terminating resistor must be installed on the last module in the CAN or PROFIBUS string.

PEH 50

Long-stroke gripper

Gripping force O.D. gripping

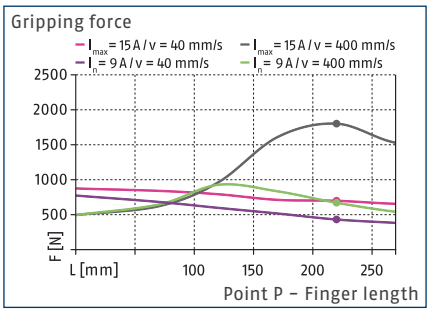

Speed

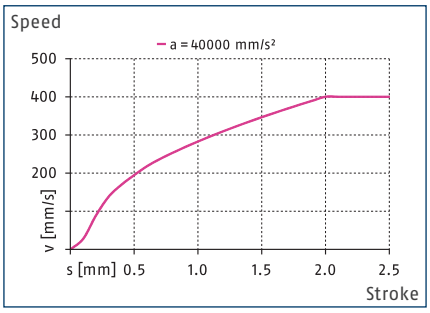

Dimensions and maximum loads

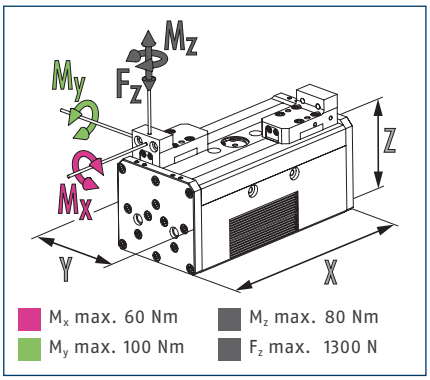

ⓘ The indicated moments and forces are statical values, apply for each base jaw and should not appear simultaneously. Loads may additionally occur to the moment produced by the gripping force itself.

Technical data

Characterization		PEH 50
ID		0306064
General operating data		
Stroke per jaw	[mm]	100
Min./max. gripping force	[N]	150/1800
Recommended workpiece weight	[kg]	9
Max. permissible finger length	[mm]	270
Max. permissible mass per finger	[kg]	4
Repeat accuracy	[mm]	±0.05
Closing/opening time	[s]	1.5/1.5
Max. speed	[mm/s]	400
Max. acceleration	[mm/s²]	40000
Weight	[kg]	16.8
Min./max. ambient temperature	[°C]	5/45
IP protection class		41
Dimensions X x Y x Z	[mm]	331 x 150 x 117.8
Electrical operating data		
Nominal voltage	[V DC]	24
Nominal current	[A]	10
Max. current	[A]	25
Controller electronics		integrated
Communication interface		PROFIBUS, CAN, digital I/O
Data rate	[Mbit/s]	1.5
Data rate	[Mbit/s]	1
Number of digital I/O		4/4
Parametrized interface		RS232

ⓘ The recommended workpiece weight has been calculated for the maximum gripping force. The maximum gripping force can be achieved at max. speed and with max. current, which may only be applied temporarily. Please contact SCHUNK technical sales for further enquiries.

Main view

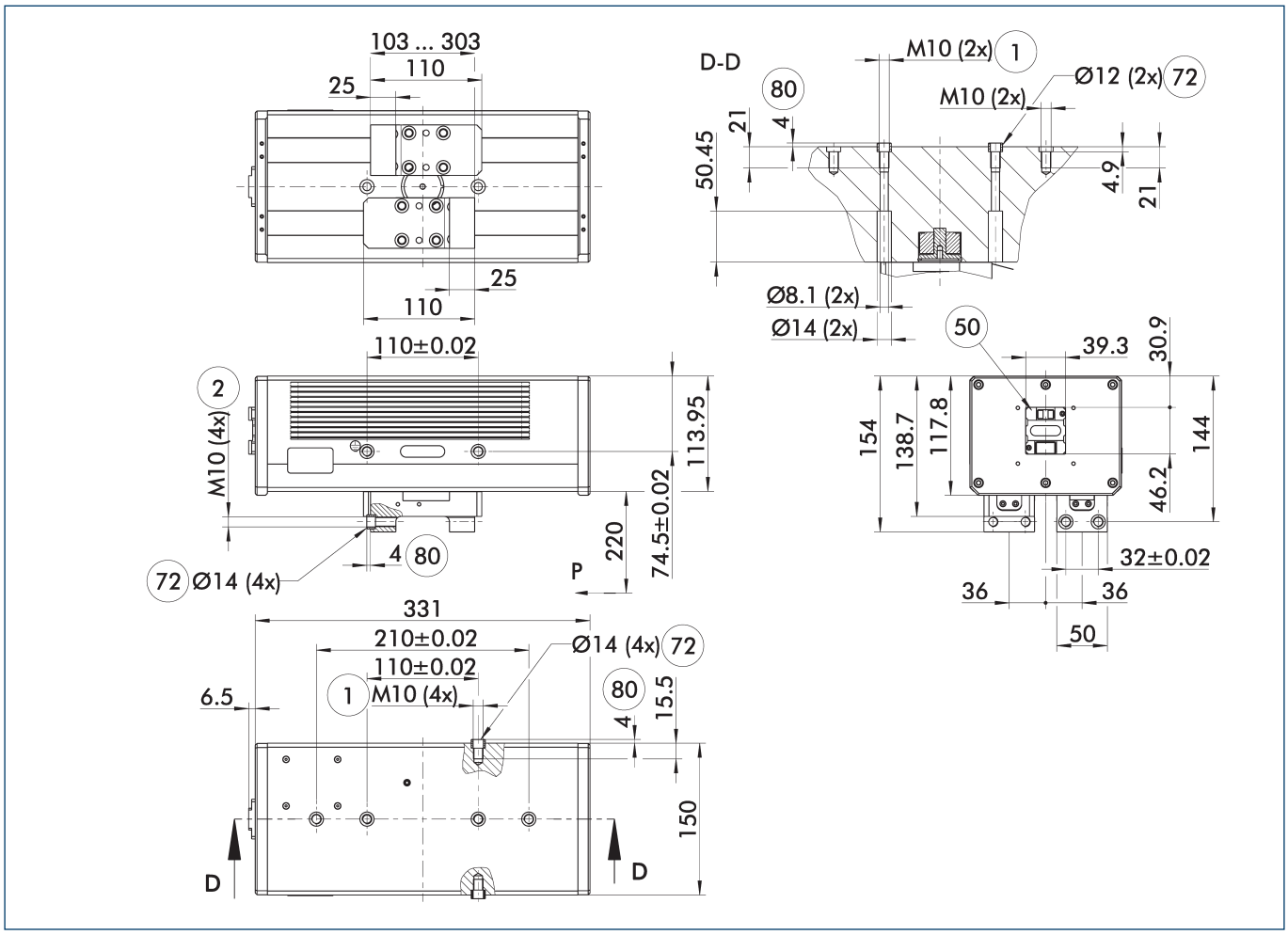

The drawing shows the gripper in the basic version with closed jaws, without dimensional consideration of the options described below.

- (1) Gripper connection
- (2) Finger connection
- (50) Electrical connection
- (72) Fit for centering sleeves
- (80) Depth of the centering sleeve hole in the counter part

Maximum permitted finger projection

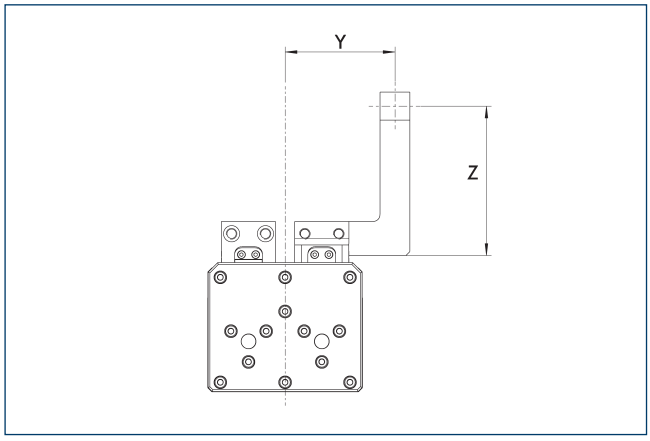

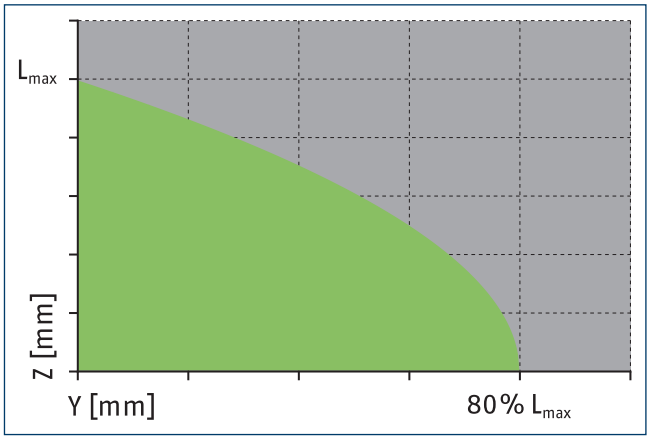

Permitted range

Inadmissible range

L^{max} is equivalent to the maximum permitted finger length, see the technical data table.

ZBA-PFH 50-160 intermediate jaws

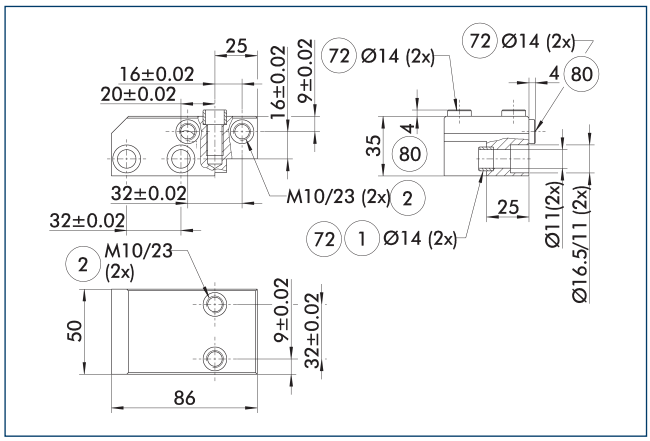

(1) Gripper connection
(2) Finger connection
(72) Fit for centering sleeves
(80) Depth of the centering sleeve hole in the counter part

The optional intermediate jaw makes a screw connection of the gripper fingers in Z-direction possible. Furthermore, the intermediate jaws compensate the parallel offset of the base jaws in Y- direction and enable an aligned connection. The design of the customer-specific gripper fingers is simplified as a result.

Characterization	ID	Material	Finger interface	Scope of delivery
Intermediate jaw				
ZBA-PFH 50-160	0300222	Steel	PGN-plus 160	2

Connection caps

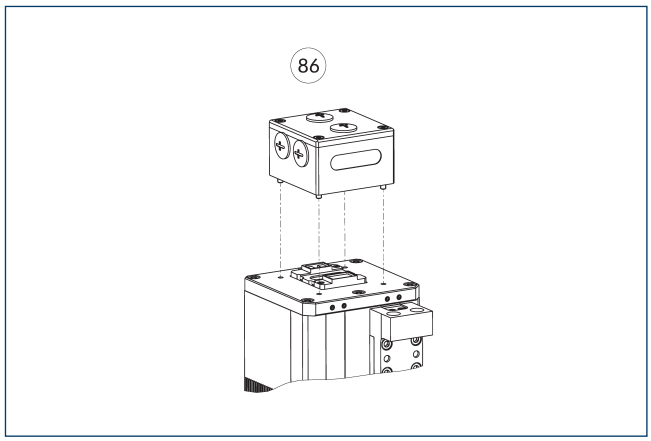

(86) Connection cap DMI

The DMI connection cap is required to connect the modules to the voltage supply or higher-level control unit. The wire strands are connected via connection terminals.

Characterization	ID	
Connection cap		
DMI 070-V05-B	0307732	

ⓘ Further information and accessories can be found in the following displays.

Connection cap DMI

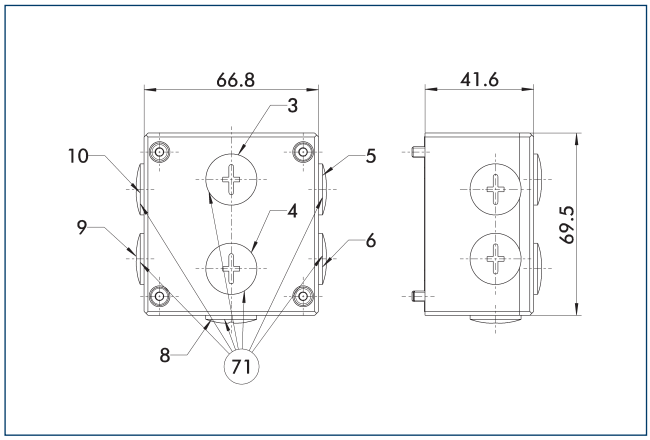

(71) M16x1.5 for cable guide penetrating screw connection

The DMI's wire strands are connected via connection terminals. The DMI is prepared for PROFIBUS and CAN communication interfaces.

Characterization	ID	
Connection cap		
DMI 070-V05-B	0307732	

PROFIBUS communication cables

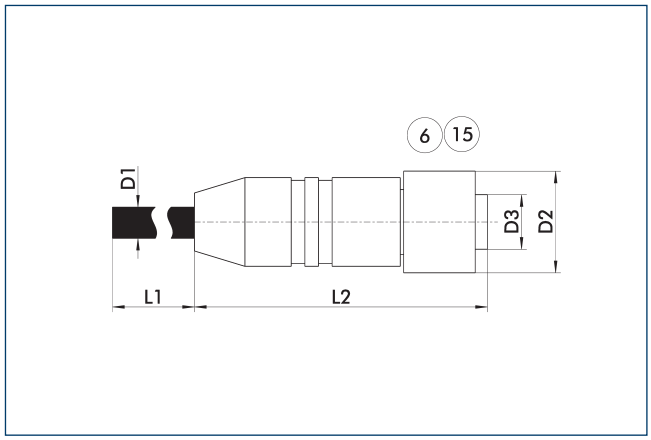

(6) Connection module side
(15) Socket

The communication cables are ready for use for the mechatronic SCHUNK products. They have M12 connectors on both sides.

Characterization	ID	L1	D1	L2	D2	D3
		[m]	[mm]	[mm]	[mm]	
PROFIBUS communication cable - drag chain suitable						
KA GGN1204-PB-00150-A	0349750	1.5	8	47	15	M12
KA GGN1204-PB-00300-A	0349751	3	8	47	15	M12
KA GGN1204-PB-00500-A	0349752	5	8	47	15	M12
KA GGN1204-PB-01000-A	0349753	10	8	47	15	M12

ⓘ Please observe the min. bending radius for cable track-compatible cables or the max. torsion angle for torsion-compatible cables. These are generally 10 times the cable diameter or +/- 180°/m.

CAN communication cables

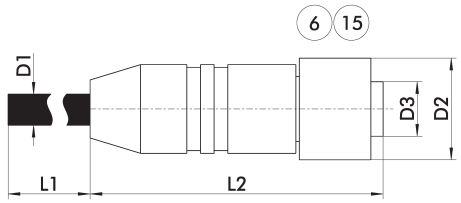

6 Connection module side 15 Socket

The communication cables are ready for use for the mechatronic SCHUNK products. They have M12 connectors on both sides.

Characterization	ID	L1	D1	L2	D2	D3
		[m]	[mm]	[mm]	[mm]	
CAN communication cable – drag chain suitable						
KA GGN1204-CN-00150-A	0349770	1.5	7	47	15	M12
KA GGN1204-CN-00300-A	0349771	3	7	47	15	M12
KA GGN1204-CN-00500-A	0349772	5	7	47	15	M12
KA GGN1204-CN-01000-A	0349773	10	7	47	15	M12

ⓘ Please observe the min. bending radius for cable track-compatible cables or the max. torsion angle for torsion-compatible cables. These are generally 10 times the cable diameter or +/- 180°/m.

Termination resistor

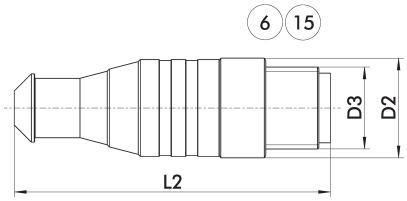

6 Connection module side 15 Socket

The terminating resistors are provided for terminating the bus string directly at the SCHUNK module.

Characterization	ID	L2	D2	D3
		[mm]	[mm]	
Termination resistor – CAN				
ST SG1204-CN-A-A	0349660	47	15	M12
Termination resistor – PROFIBUS				
ST SG1204-PB-A-A	0349650	47	15	M12

ⓘ An appropriate terminating resistor must be installed on the last module in the CAN or PROFIBUS string.

SCHUNK GmbH & Co. KG
Spann- und Greiftechnik

Bahnhofstr. 106 – 134
D-74348 Lauffen/Neckar
Tel. +49-7133-103-0
Fax +49-7133-103-2399
info@de.schunk.com
schunk.com

Follow us

2020-05-06 © 2020 SCHUNK GmbH & Co. KG